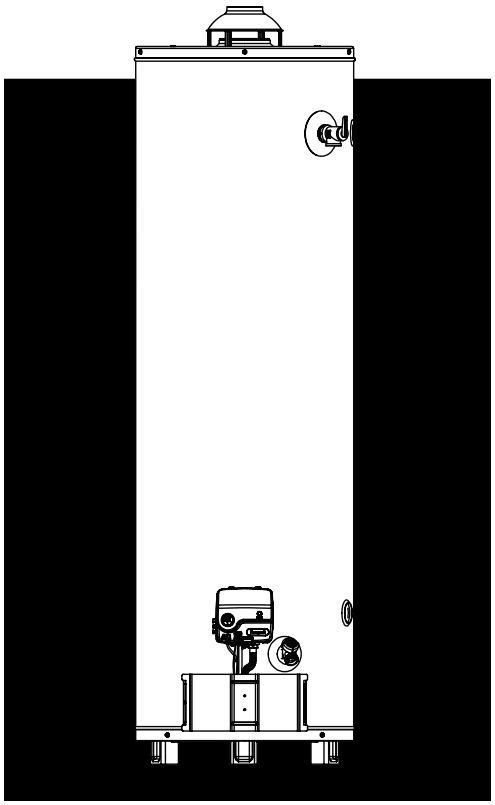

Ultra Low Nox Gas Water Heater with the Flame Guard™ Safety System

Installation Instructions and Use & Care Guide

WARNING: If the information in these instructions is not followed exactly, a fire or explosion may result causing property damage, personal injury or death.

Do not store or use gasoline or other flammable vapors and liquids in the vicinity of this or any other appliance.

WHAT TO DO IF YOU SMELL GAS

- **Do not try to light any appliance.**
- **Do not touch any electrical switch; do not use any phone in your building.**
- **Immediately call your gas supplier from a neighbor's phone. Follow the gas supplier's instructions.**
- **If you cannot reach your gas supplier, call the fire department.**

Installation and service must be performed by a qualified installer, service agency or the gas supplier.

INSTALLER:

- AFFIX THESE INSTRUCTIONS TO OR ADJACENT TO THE WATER HEATER.

OWNER:

- RETAIN THESE INSTRUCTIONS AND WARRANTY FOR FUTURE REFERENCE. RETAIN THE ORIGINAL RECEIPT AS PROOF OF PURCHASE.

To obtain technical, warranty, or service assistance during or after the installation of this water heater, visit our website at:

http://www.americanwaterheater.com

or call toll free
1-800-999-9515

When calling for assistance, please have the following information ready:

1. Model number
2. 7 digit product number
3. Serial number
4. Date of installation
5. Place of purchase

Table of Contents 2

AHRI CERTIFIED® www.ahridirectory.org

DESIGN CERTIFIED®

LOW LEAD CONTENT

100263712
February 2015

WATER HEATER SAFETY

Your safety and the safety of others are very important.

We have provided many important safety messages in this manual and on your appliance. Always read and obey all safety messages.

This is the safety alert symbol.
This symbol alerts you to potential hazards that can kill or hurt you and others.
All safety messages will follow the safety alert symbol and either the word "DANGER" or "WARNING." These words mean:

⚠ DANGER — **Indicates an imminently hazardous situation which, if not avoided, will result in death or injury.**

⚠ WARNING — **Indicates a hazardous situation which, if not avoided, could result in death or serious injury.**

All safety messages will tell you what the potential hazard is, tell you how to reduce the chance of injury, and tell you what can happen if the instructions are not followed.

Important Instructions

- Do not use this appliance if any part has been under water. Immediately call a qualified person. Water heaters subjected to flood conditions or any time the gas controls, main burner or pilot have been submerged in water require replacement of the entire water heater.
- Hydrogen gas can be produced in a hot water system that has not been used for a long period of time (generally two weeks or more). Hydrogen gas is extremely flammable and can ignite when exposed to a spark or flame. To prevent the possibility of injury under these conditions, we recommend the hot water faucet be opened for several minutes at the kitchen sink before using any electrical appliance which is connected to the hot water system. If hydrogen is present, there will probably be an unusual sound such as air escaping through the faucet as water begins to flow. Do not smoke or have any open flame near the faucet at the time it is open.

The California Safe Drinking Water and Toxic Enforcement Act requires the Governor of California to publish a list of substances known to the State of California to cause cancer, birth defects, or other reproductive harm, and requires businesses to warn of potential exposure to such substances.

- WARNING: This product contains a chemical known to the State of California to cause cancer, birth defects, or other reproductive harm.
- This appliance can cause low-level exposure to some of the substances listed in the Act.

This product is certified to comply with a maximum weighted average of 0.25% lead content as required in some areas.

Table Of Contents

	PAGE
Water Heater Safety	1-2
Installing Your Gas Water Heater	3-16
Unpacking the Water Heater	3
Location Requirements	4-5
Gas Supply	6-7
Combustion Air Supply and Ventilation	7-11
Water System Piping	12-13
Temperature & Pressure Relief Valve	14
Special Applications	14
Installation Checklist	16
Operating Your Water Heater	17-22
Lighting Instructions	17-18
Operating the Temperature Control System	21
Operational Conditions	21-22
Maintenance of Your Water Heater	23-28
Troubleshooting Charts	28-31
Repair Parts Illustration	32-33

INSTALLING YOUR GAS WATER HEATER

Important Information About This Water Heater

This gas water heater was manufactured to voluntary safety standards to reduce the likelihood of a flammable vapor ignition incident. New technology used in meeting these standards makes this product more sensitive to installation errors or improper installation environments. Please review the Installation Checklist found at the end of the installation instructions section and make any required installation upgrades or changes.

Consumer Information

This water heater is design-certified by CSA International as a Category I, non-direct vented water heater which takes its combustion air either from the installation area or from air ducted to the unit from the outside.

This water heater must be installed according to all local and state codes or, in the absence of local and state codes, the “National Fuel Gas Code”, ANSI Z223.1(NFPA 54)-current edition. This is available from the following:

CSA America, Inc.
8501 East Pleasant Valley Road
Cleveland, OH 44131

National Fire Protection Association
1 Batterymarch Park
Quincy, MA 02269

Check your phone listings for the local authorities having jurisdiction over your installation.

Consumer Responsibilities

This manual has been prepared to acquaint you with the installation, operation, and maintenance of your gas water heater and provide important safety information in these areas.

Read all of the instructions thoroughly before attempting the installation or operation of this water heater.

Do not discard this manual. You or future users of this water heater will need it for future reference.

Service to the Flame Guard™ Safety System should only be performed by a qualified person.

Examples of a qualified person include: licensed plumbers, authorized gas company personnel, and authorized service personnel.

IMPORTANT: The manufacturer and seller of this water heater will not be liable for any damages, injuries, or deaths caused by failure to comply with the installation and operating instructions outlined in this manual.

If you lack the necessary skills required to properly install this water heater, or you have difficulty following the instructions, you should not proceed but have a qualified person perform the installation of this water heater. Massachusetts code requires this water heater to be installed in accordance with Massachusetts Plumbing and Fuel Gas Code 248 CMR Section 2.00 and 5.00.

A data plate identifying your water heater can be found next to the gas control valve/thermostat. When referring to your water heater, always have the information listed on the data plate readily available.

Retain your original receipt as proof of purchase.

Unpacking the Water Heater

⚠WARNING

Excessive Weight Hazard

Use two or more people to move and install water heater.

Failure to do so can result in back or other injury.

IMPORTANT: Do not remove any permanent instructions, labels, or the data label from either the outside of the water heater or on the inside of water heater panels.

- Remove exterior packaging and place installation components aside.
- Inspect all parts for damage prior to installation and start-up.
- Completely read all instructions before attempting to assemble and install this product.
- After installation, dispose of/recycle all packaging materials.

⚠ WARNING

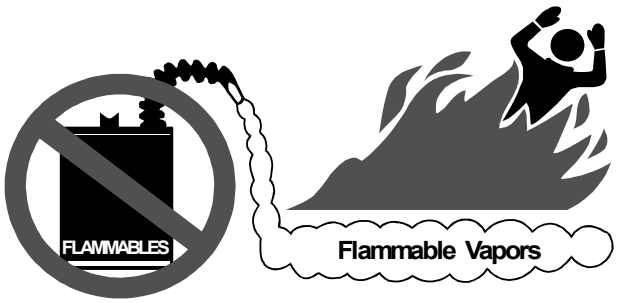

FIRE AND EXPLOSION HAZARD

Can result in serious injury or death

⚠ Do not store or use gasoline or other flammable vapors and liquids in the vicinity of this or any other appliance. Storage of or use of gasoline or other flammable vapors or liquids in the vicinity of this or any other appliance can result in serious injury or death.

Read and follow water heater warnings and instructions.

Location Requirements

⚠ WARNING

Carbon Monoxide Poisoning Hazard

Do not install in a mobile home.

Doing so can result in death or carbon monoxide poisoning.

The Flame Guard™ Safety System is designed to reduce the risk of flammable vapor-related fires. The patented system protects your family by trapping the burning vapors within the water heater combustion chamber through the special flame-trap. The burning vapors literally “burn themselves out” without escaping back into the room. In the event of a flammable vapor incident, the Flame Guard™ Safety System disables the water heater by shutting off the gas supply to the water heater’s burner and pilot, preventing re-ignition of any remaining flammable vapors in the area. This will not prevent a possible fire/explosion if the igniter is depressed and flammable vapors have accumulated in the combustion chamber with the pilot light off. If you suspect a flammable vapor incident has occurred, do not use this appliance. Do not attempt to light this appliance, or depress the igniter button if you suspect flammable vapors have accumulated inside or outside the appliance. Immediately call a qualified person to inspect the appliance. Water heaters subjected to a flammable vapors incident will show a discoloration on the flame-trap and require replacement of the entire water heater. **Note:** Not following these instructions and/or an inadequate air supply can cause the Flame Guard™ Safety System to disable the water heater. Please make required installation and venting/air supply changes prior to resetting the system (see “Combustion Air Supply and Ventilation” section).

Do not use or store flammable products such as gasoline, solvents, or adhesives in the same room or area near the water heater. If such flammables must be used, all gas burning appliances in the vicinity must be shut off and their pilot lights extinguished. Open the doors and windows for ventilation while flammable substances are in use.

If flammable liquids or vapors have spilled or leaked in the area of the water heater, leave the area immediately and call the fire department from a neighbor’s home. Do not attempt to clean the spill until all ignition sources have been extinguished.

Keep combustibles such as boxes, magazines, clothes, etc. away from the water heater area.

Site Location

- Select a location near the center of the water piping system. The water heater must be installed indoors and in a vertical position on a level surface. Do not install in bathrooms, bedrooms, or any occupied room normally kept closed.
- Locate the water heater as close to the chimney or gas vent as practical. Consider the vent system piping and combustion air supply requirements when selecting the water heater location. The venting system must be able to run from the water heater to termination with minimal length and elbows.
- Locate the water heater near the existing gas piping. If installing a new gas line, locate the water heater to minimize the pipe length and elbows.

NOTE: This water heater must be installed according to all local and state codes or, in the absence of local and state codes, the “National Fuel Gas Code”, ANSI Z223.1(NFPA 54)-current edition.

IMPORTANT: The water heater should be located in an area where leakage of the tank or connections will not result in damage to the area adjacent to the water heater or to lower floors of the structure. Due to the normal corrosive action of the water, the tank will eventually leak after an extended period of time. Also any external plumbing leak, including those from improper installation, may cause early failure of the tank due to corrosion if not repaired. If the homeowner is uncomfortable with making the repair a qualified person should be contacted. A suitable metal drain pan should be installed under the water heater as shown below, to help protect the property from damage which may occur from condensate formation or leaks in the piping connections or tank. The pan must limit the water level to a maximum depth of 1-3/4" and be two inches wider than the heater and piped to an adequate drain.
NOTE: The pan must not restrict combustion air flow. Locate the water heater near an adequate indoor drain. The discharge pipe must terminate a maximum of six inches above a floor drain or external to the building. In cold climates, it is recommended that the discharge pipe be terminated at an adequate drain inside the building. Outside drains are subject to freezing temperatures which can obstruct the drain line. The piping should be at least 3/4" ID and pitched for proper drainage. Under no circumstances will the manufacturer or seller of this water heater be held liable for any water damage which is caused by your failure to follow these instructions.

Figure 1
Drain Pan Installation

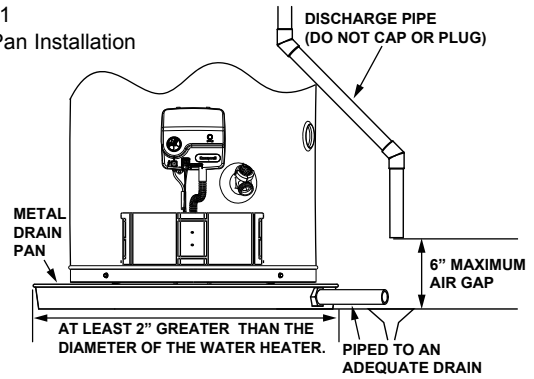

- The water heater should be located in an area not subject to freezing temperatures. Water heaters located in unconditioned spaces (i.e., attics, basements, etc.) may require insulation of the water piping and drain piping to protect against freezing. The drain and controls must be easily accessible for operation and service. Maintain proper clearances as specified on the data plate.
- Do not locate the water heater near an air-moving device. The operation of air-moving devices such as exhaust fans, ventilation systems, clothes dryers, fireplaces, etc., can affect the proper operation of the water heater. Special attention must be given to conditions these devices may create. Flow reversal of flue gases may cause an increase of carbon monoxide inside of the dwelling.
- If the water heater is located in an area that is subjected to lint, dirt, and oil, it may be necessary to periodically clean the flame-trap (see "External Inspection & Cleaning of the Flame-trap" section).

Figure 1A
Air-moving
Devices

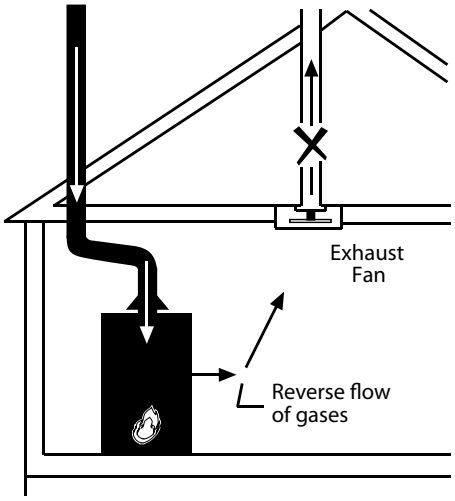

Clearances and Accessibility

NOTE: Minimum clearances from combustible surfaces are stated on the data plate adjacent to the gas control valve/ thermostat of the water heater.
The water heater is certified for installation on a combustible floor.

- **IMPORTANT:** If installing over carpeting, the carpeting must be protected by a metal or wood panel beneath the water heater. The protective panel must extend beyond the full width and depth of the water heater by at least three inches (76.2mm) in any direction; or if in an alcove or closet installation, the entire floor must be covered by the panel.
- Figure 2 may be used as a reference guide to locate the specific clearance locations. A minimum of 24 inches of front clearance should be provided for inspection and service.

Figure 2
Minimum Clearance
Locations

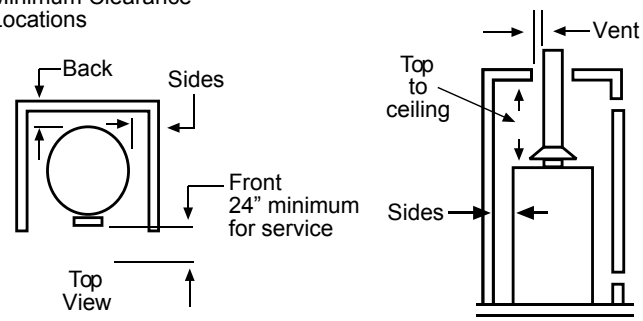

State of California
NOTE: For California installation, this water heater must be braced, anchored, or strapped to avoid falling or moving during an earthquake. Correct installation procedure instructions may be obtained from California's Office of the State Architect, 1102 Q street, Suite 5100, Sacramento, CA 95811. Instructions can also be downloaded to your computer at www.dsa.dgs.ca.gov/Pubs.

Gas Supply

⚠WARNING

Explosion Hazard

Use a new CSA approved gas supply line.

Install a shut-off valve.

Do not connect a natural gas water heater to an L.P. gas supply.

Do not connect an L.P. gas water heater to a natural gas supply.

Failure to follow these instructions can result in death, explosion, or carbon monoxide poisoning.

Gas Requirements

IMPORTANT: Read the data plate to be sure the water heater is made for the type of gas you will be using in your home. This information will be found on the data plate located near the gas control valve/thermostat. If the information does not agree with the type of gas available, do not install or light. Call your dealer.

NOTE: An odorant is added by the gas supplier to the gas used by this water heater. This odorant may fade over an extended period of time. Do not depend upon this odorant as an indication of leaking gas.

Gas Piping

The gas piping must be installed according to all local and state codes or, in the absence of local and state codes, the "National Fuel Gas Code", ANSI Z223.1(NFPA 54)-current edition.

Table 1 on page 7 provides a sizing reference for commonly used gas pipe materials. Consult the "National Fuel Gas Code" for the recommended gas pipe size of other materials.

Refer to Figure 3

NOTE: When installing gas piping, apply approved pipe joint compound.

1. Install a readily accessible manual shut-off valve in the gas supply line as recommended by the local utility. Know the location of this valve and how to turn off the gas to this unit.
2. Install a sediment trap (if not already incorporated as part of the water heater) as shown. The sediment trap must be no less than three inches long for the accumulation of dirt, foreign material, and water droplets.
3. Install a ground joint union between the gas control valve/thermostat and the manual shut-off valve. This is to allow easy removal of the gas control valve/ thermostat.
4. Turn the gas supply on and check for leaks. Test all connections by brushing on an approved noncorrosive leak-detection solution. Bubbles will show a leak. Correct any leak found.

Figure 3
Gas Piping

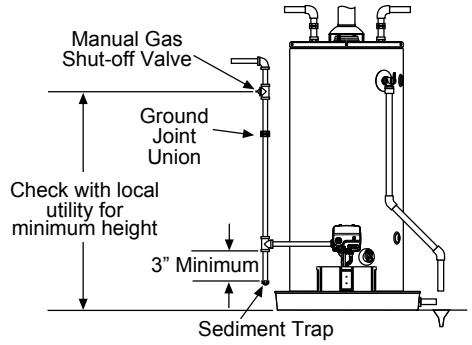

Gas Pressure

IMPORTANT: The gas supply pressure must not exceed the maximum supply pressure as stated on the water heater's data plate. The minimum supply pressure is for the purpose of input adjustment.

Gas Pressure Testing

IMPORTANT: This water heater and its gas connection must be leak tested before placing the appliance in operation.

- If the code requires the gas lines to be tested at a pressure exceeding 14" W.C., the water heater and its manual shut-off valve must be disconnected from the gas supply piping system and the line capped.
- If the gas lines are to be tested at a pressure less than 14" W.C., the water heater must be isolated from the gas supply piping system by closing its manual shut-off valve.

U.L. recognized fuel gas and carbon monoxide (CO) detectors are recommended in all applications and should be installed using the manufacturer's instructions and local codes, rules, or regulations.

NOTE: Air may be present in the gas lines and could prevent the pilot from lighting on initial start-up. The gas lines should be purged of air by a qualified person after installation of the gas piping system. While purging the gas piping system of air, make sure that the fuel is not spilled in the area of the water heater installation, or any source of ignition. If the fuel is spilled while purging the piping system of air follow the "WHAT TO DO IF YOU SMELL GAS" instructions on the cover of this manual.

Table 1
Natural Gas Pipe Capacity Table (Cu. Ft./Hr.)
Capacity of gas pipe of different diameters and lengths in cu. ft. per hr. with pressure drop of 0.3 in. and specific gravity of 0.60 (natural gas).

Nominal Iron Pipe Size, in.	Length of Pipe, Feet 10	20	30	40	50	60	70	80	90	100	125	150	175	200
1/2	132	92	73	63	56	50	46	43	40	38	34	31	28	26
3/4	278	190	152	130	115	105	96	90	84	79	72	64	59	55
1	520	350	285	245	215	195	180	170	160	150	130	120	110	100
1-1/4	1050	730	590	500	440	400	370	350	320	305	275	250	225	210
1-1/2	1600	1100	890	760	670	610	560	530	490	460	410	380	350	320

After the length of pipe has been determined, select the pipe size which will provide the minimum cubic feet per hour required for the gas input rating of the water heater. By formula:

$$\text{Cu. Ft. Per Hr. Required} = \frac{\text{Gas Input of Water Heater (BTU/HR)}}{\text{Heating Value of Gas (BTU/FT}^3\text{)}}$$

The gas input of the water heater is marked on the water heater data plate. The heating value of the gas (BTU/FT^3) may be determined by consulting the local natural gas utility.

Additional tables are available in the latest edition of the "National Fuel Gas Code", ANSI Z223.1.

Combustion Air Supply and Ventilation

⚠ WARNING

Carbon Monoxide Hazard

Water heater must be vented to outdoors.

Vent must be installed by a qualified person using the installation instructions.

**Examples of a qualified person include:
gas technicians,
authorized gas company personnel,
and authorized service persons.**

Failure to follow these instructions can result in death or carbon monoxide poisoning.

IMPORTANT: Air for combustion and ventilation must not come from a corrosive atmosphere. Any failure due to corrosive elements in the atmosphere is excluded from warranty coverage.

The following types of installation (not limited to the following) will require outdoor air for combustion due to chemical exposure and may reduce but not eliminate the presence of corrosive chemicals in the air:

- beauty shops
- photo processing labs
- buildings with indoor pools
- water heaters installed in laundry, hobby, or craft rooms
- water heaters installed near chemical storage areas

Combustion air must be free of acid-forming chemicals such as sulfur, fluorine, and chlorine. These elements are found in aerosol sprays, detergents, bleaches, cleaning solvents, air fresheners, paint, and varnish removers, refrigerants, and many other commercial and household products. When burned, vapors from these products form highly corrosive acid compounds. These products should not be stored or used near the water heater or air inlet.

Combustion and ventilation air requirements are determined by the location of the water heater. The water heater may be located in either an open (unconfined) area or in a confined area or small enclosure such as a closet or small room. Confined spaces are areas with less than 50 cubic feet for each 1,000 BTU/HR of the total input for all gas-using appliances.

Unconfined Space

A water heater in an unconfined space uses indoor air for combustion and requires at least 50 cubic feet for each 1,000 BTU/HR of the total input for all gas appliances. The table below shows a few examples of the minimum square footage (area) required for various BTU/HR inputs.

Table 2

BTU/HR Input	Minimum Square Feet with 8' Ceiling	Typical Room with 8' Ceiling
30,000	188	9 x 21
45,000	281	14 x 20
60,000	375	15 x 25
75,000	469	15 x 31
90,000	563	20 x 28
105,000	657	20 x 33
120,000	750	25 x 30
135,000	844	28 x 30

IMPORTANT:

- The area must be open and be able to provide the proper air requirements to the water heater. Areas that are being used for storage or contain large objects may not be suitable for water heater installation.
- Water heaters installed in open spaces in buildings with unusually tight construction may still require outdoor air to function properly. In this situation, outside air openings should be sized the same as for a confined space.
- Modern home construction usually requires supplying outside air into the water heater area.

Confined Space

For the correct and proper operation of this water heater, ample air must be supplied for the combustion, ventilation, and dilution of flue gases. Small enclosures and confined areas must have two permanent openings so that sufficient fresh air can be drawn from outside of the enclosure. One opening shall be within 12 inches of the top and one within 12 inches of the bottom of the enclosure as shown in Figure 4.

The size of each opening (free area) is determined by the total BTU/HR input of all gas utilization equipment (i.e., water heaters, furnaces, clothes dryers, etc.) and the method by which the air is provided. The BTU/HR input can be found on the water heater data plate. Additional air can be provided by two methods:

1. All air from inside the building.
2. All air from outdoors.

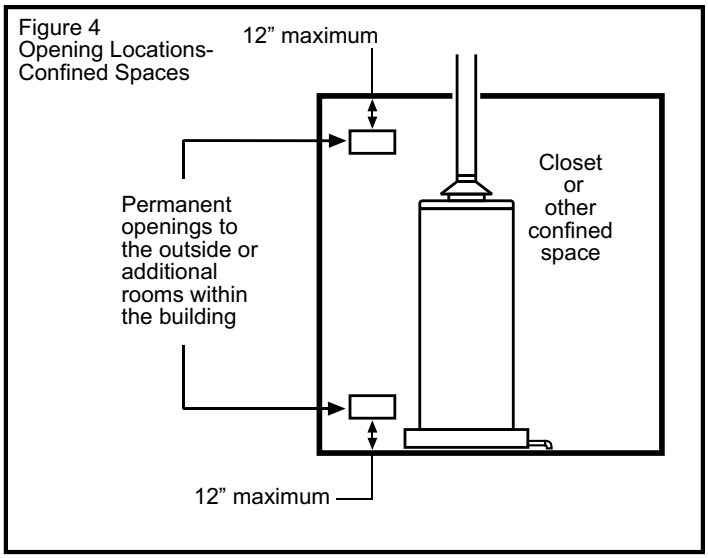

Figure 4
Opening Locations-Confined Spaces

All Air from Inside the Building

When additional air is to be provided to the confined area from additional room(s) within the building, the total volume of the room(s) must be of sufficient size to properly provide the necessary amount of fresh air to the water heater and other gas utilization equipment in the area. If you are unsure that the structure meets this requirement, contact your local gas utility company or other qualified agency for a safety inspection.

Each of the two openings shall have a minimum free area of 1 square inch per 1,000 BTU/HR of the total input rating of all gas utilization equipment in the confined area, but not less than 100 square inches (Figure 5).

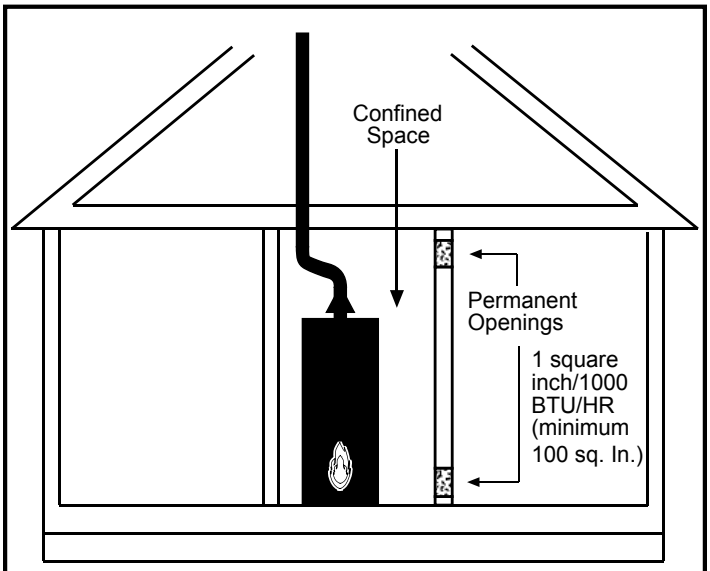

Figure 5
All Air from Inside Building
Confined Space Installation

All Air from Outdoors

Outdoor fresh air can be provided to a confined area either directly or by the use of vertical and horizontal ducts. The fresh air can be taken from the outdoors or from crawl or attic spaces that freely communicate with the outdoors. Attic or crawl spaces cannot be closed and must be properly ventilated to the outside.

Ductwork must be of the same cross-sectional area as the free area of the opening to which they connect. The minimum dimension of rectangular air ducts cannot be less than three inches.

The size of each of the two openings is determined by the method in which the air is to be provided. Refer to Table 3 to calculate the minimum free area for each opening. Figures 6, 7, and 8 are typical examples of each method.

Louvers and Grilles

In calculating free area for ventilation and combustion air supply openings, consideration must be given to the blocking effect of protection louvers, grilles, and screens. These devices can reduce airflow, which in turn may require larger openings to achieve the required minimum free area. Screens must not be smaller than 1/4” mesh. If the free area through a particular design of louver or grille is known, it should be used in calculating the specified free area of the opening. If the design and free area are not known, it can be assumed that most wood louvers will allow 20 - 25% of free area while metal louvers and grilles will allow 60 - 75% of free area.

Louvers and grilles must be locked open or interconnected with the equipment so that they are opened automatically during equipment operation.

Keep louvers and grilles clean and free of debris or other obstructions.

Table 3
Minimum Free Area of Permanent Openings for Ventilation and Combustion Air Supply - All Air from Outdoors Only.
Based on the total BTU/HR input rating for all utilizing equipment within the confined space.

Opening Source	Minimum Free Area Per Opening (sq. in.)	Reference Drawing
* Direct to outdoors	1 sq. in, per 4000 BTU/HR	Figure 6
Vertical ducts	1 sq. in, per 4000 BTU/HR	Figure 7
Horizontal ducts	1 sq. in, per 2000 BTU/HR	Figure 8A
Single Opening	1 sq. in, per 3000 BTU/HR	Figure 8B

Example: A water heater with an input rate of 50,000 BTU/HR using horizontal ducts would require each opening to have a minimum free area of 25 square inches.
Minimum free area = 50,000 BTU/HR x 1 sq. in. / 2000 BTU/HR = 25 Sq. Inches.

* These openings connect directly with the outdoors through a ventilated attic, a ventilated crawl space, or through an outside wall.

Consult the local codes of your area for specific ventilation and combustion air requirements.

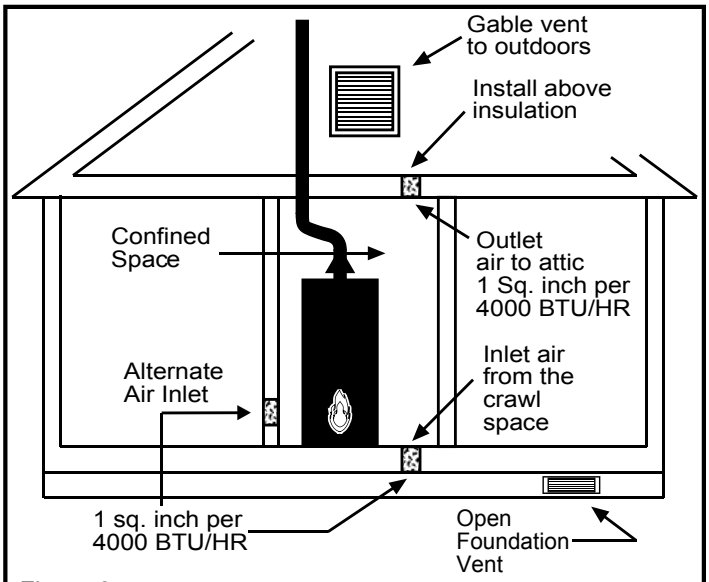

Figure 6
All Air from Outdoors; Inlet Air from Ventilated Crawl Space/Outlet Air to Ventilated Attic

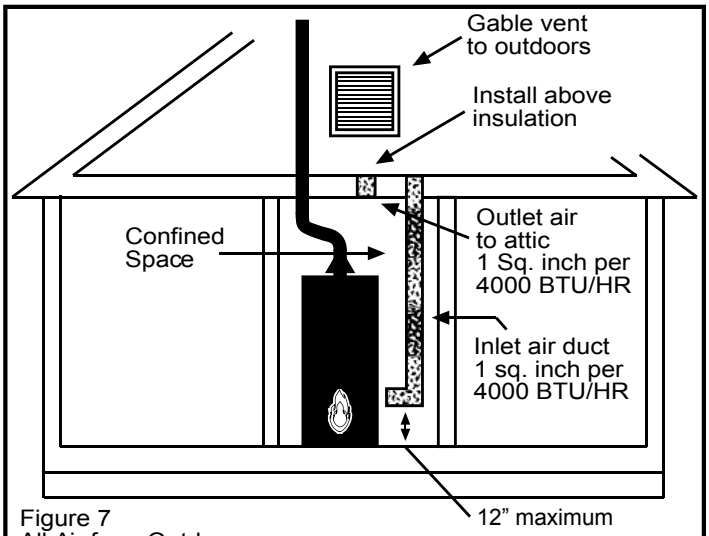

Figure 7
All Air from Outdoors Through Ventilated Attic

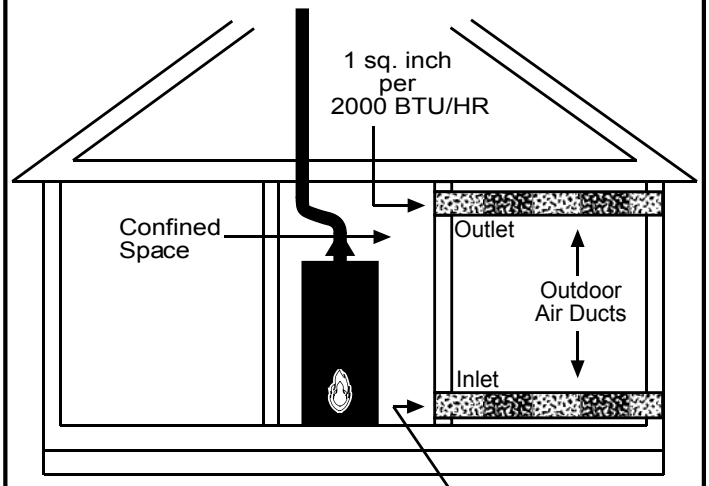

Figure 8A
All Air from Outdoors Using Horizontal Ducts

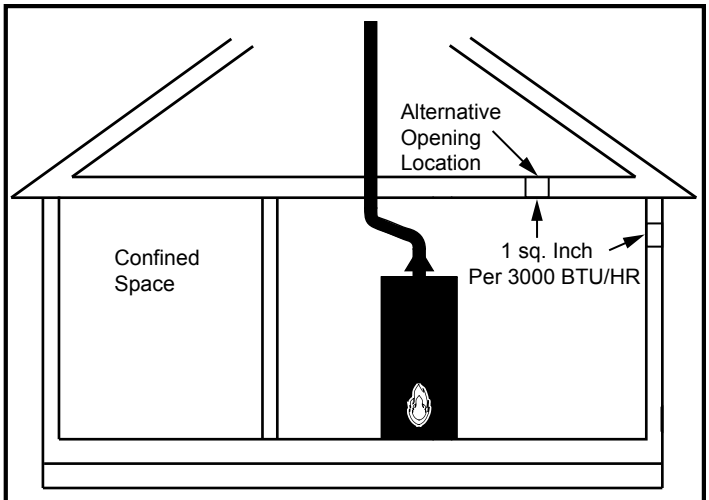

Figure 8B
All Air from Outdoors
Using a Single Permanent Opening

Vent Pipe System

This water heater uses a non-direct, single-pipe vent system to remove exhaust gases created by the burning of fossil fuels. Air for combustion is taken from the immediate water heater location or is ducted in from the outside (see "Combustion Air Supply and Ventilation" section).

This water heater must be properly vented for the removal of exhaust gases to the outside atmosphere. Correct installation of the vent pipe system is mandatory for the proper and efficient operation of this water heater and is an important factor in the life of the unit.

The vent pipe must be installed according to all local and state codes or, in the absence of local and state codes, the "National Fuel Gas Code", ANSI Z223.1(NFPA 54)-current edition. The vent pipe installation must not be obstructed so as to prevent the removal of exhaust gases to the outside atmosphere.

IMPORTANT: The use of vent dampers is not recommended by the manufacturer of this water heater. Although some vent dampers are certified by CSA International, this certification applies to the vent damper device only and does not mean they are certified for use on this water heater.

U.L. recognized fuel gas and carbon monoxide (CO) detectors are recommended in all applications and should be installed using the manufacturer's instructions and local codes, rules, or regulations.

IMPORTANT: If you lack the necessary skills required to properly install this venting system, you should not proceed, but get help from a qualified person.

Draft Hood Installation

Align the legs of the draft hood with the slots provided. Insert the legs and secure the draft hood to the water heater's top with the four screws provided as shown in Figure 9. Do not alter the draft hood in any way. If you are replacing an existing water heater, be sure to use the new draft hood supplied with the water heater. IMPORTANT: 50K models must use the supplied 4" draft hood. See Figure 9.

Vent Pipe Size

It is important that you follow the guidelines in these instructions for sizing a vent pipe system. If a transition to a larger vent size is required, the vent transition connection must be made at the draft hood outlet.

Figure 9
Draft hood Installation

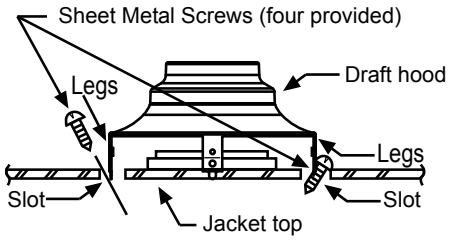

3"- 4" Draft Hood Combination — Install the draft hood with the four screws provided.

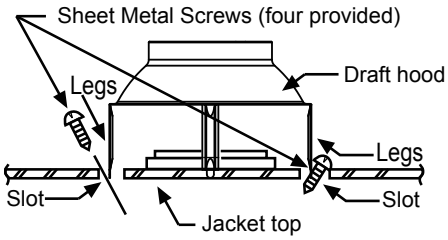

4" Draft Hood (50K Models) — Install the draft hood with the four screws provided.

Vent Connectors

1. Type B, Double wall, U.L. Listed Vent Pipe.
2. Single wall Vent Pipe.

Maintain the manufacturer's specified minimum clearance from combustible materials when using type B double wall vent pipe.

Vent connectors made of type B, double wall vent pipe material may pass through walls or partitions constructed of combustible material if the minimum listed clearance is maintained.

Maintain a six inch minimum clearance from all combustible materials when using single wall vent pipe.

IMPORTANT: Single wall vent pipe cannot be used for water heaters located in attics and may not pass through attic spaces, crawl spaces or any confined or inaccessible location. A single wall metal vent connector cannot pass through any interior wall.

When installing a vent connector, please note the following:

- Install the vent connector avoiding unnecessary bends, which create resistance to the flow of vent gases.
- Install without dips or sags with an upward slope of at least 1/4-inch per foot.
- Joints must be fastened by sheet metal screws or other approved means. It must be supported to maintain clearances and prevent separation of joints and damage.
- The length of the vent connector cannot exceed 75% of the vertical vent height.
- The vent connector must be accessible for cleaning, inspection, and replacement.
- Vent connectors cannot pass through any ceiling, floor, firewall, or fire partition.
- It is recommended (but not mandatory) that a minimum 12 inches of vertical vent pipe be installed on the draft hood prior to any elbow in the vent system to improve conditions for positive flow of venting gases.

IMPORTANT: Existing vent systems must be inspected for obstructions, corrosion, and proper installation.

Chimney Connection

IMPORTANT: Before connecting a vent to a chimney, make sure the chimney passageway is clear and free of obstructions. The chimney must be cleaned if previously used for venting solid fuel appliances or fireplaces. Also consult local and state codes for proper chimney sizing and application or, in the absence of local and state codes, the "National Fuel Gas Code", ANSI Z223.1(NFPA 54)-current edition.

- The connector must be installed above the extreme bottom of the chimney to prevent potentially blocking the flue gases.
- The connector must be firmly attached and sealed to prevent it from falling out.
- To aid in removing the connector, a thimble or slip joint may be used.
- The connector must not extend beyond the inner edge of the chimney as it may restrict the space between it and the opposite wall of the chimney (Figure 10).

Do not terminate the vent connector in a chimney that has not been certified for this purpose. Some local codes may prohibit the termination of vent connectors in a masonry chimney.

Vertical Exhaust Gas Vent

Vertical exhaust gas vents must be installed with U.L. listed type B vent pipe according to the vent manufacturer's instructions and the terms of its listing.

It must be connected to the water heater's draft hood by a listed vent connector or by directly originating at the draft hood opening.

Vertical gas vents must terminate with a listed cap or other roof assembly and be installed according to their manufacturer's instructions.

Gas vents must be supported to prevent damage, joint separation, and maintain clearances to combustible materials (Figures 11 and 12).

IMPORTANT: This gas vent must be terminated in a vertical position to facilitate the removal of the burnt gases.

An unused chimney flue or masonry enclosure may be used as a passageway for the installation of a gas vent (Figure 12).

Common (combined) venting is allowable with vertical type B vent systems and lined masonry chimneys as long as proper draft for the water heater is established under all conditions of operation.

IMPORTANT: Do not common vent this water heater with any power vented appliance.

Figures 10-12 are examples of vent pipe system installations and may or may not be typical for your specific application. Consult the "National Fuel Gas Code", NFPA 54, ANSI Z223.1-current edition and the guidelines set forth by prevailing local codes.

Figure 10
Chimney Termination
Vent System

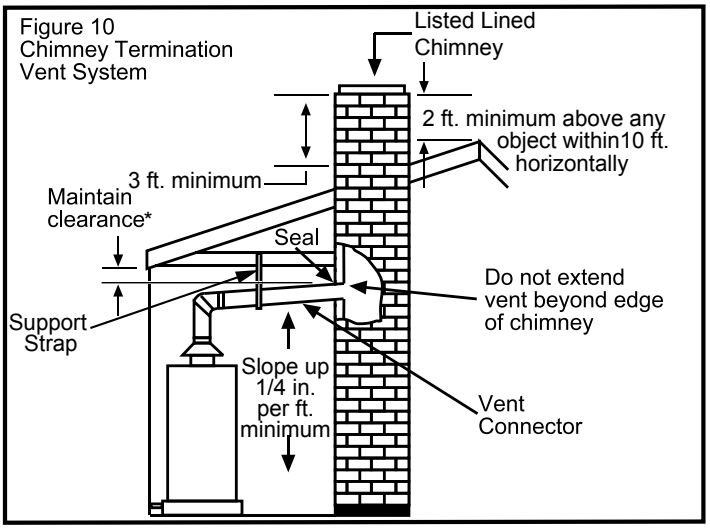

Figure 11
Vertical Gas
Vent System
With Type B
Double Wall
Vent Pipe.

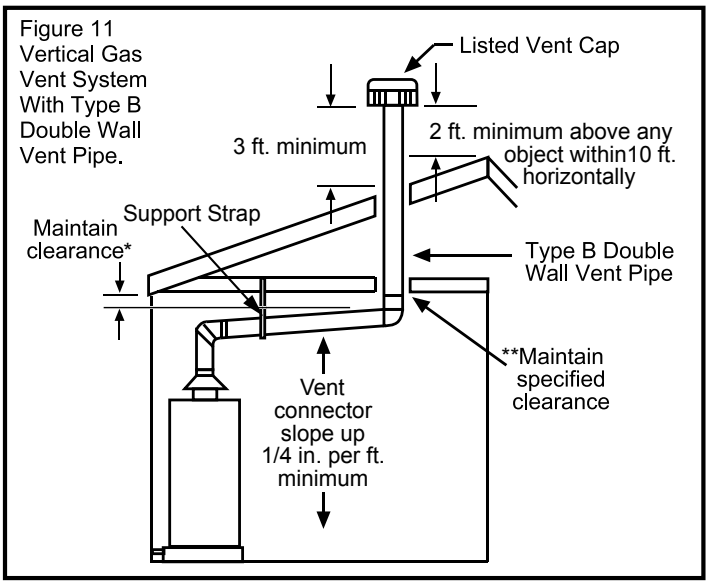

Figure 12
Venting Through
a Chimney
with Type B
Double Wall
Vent Pipe.

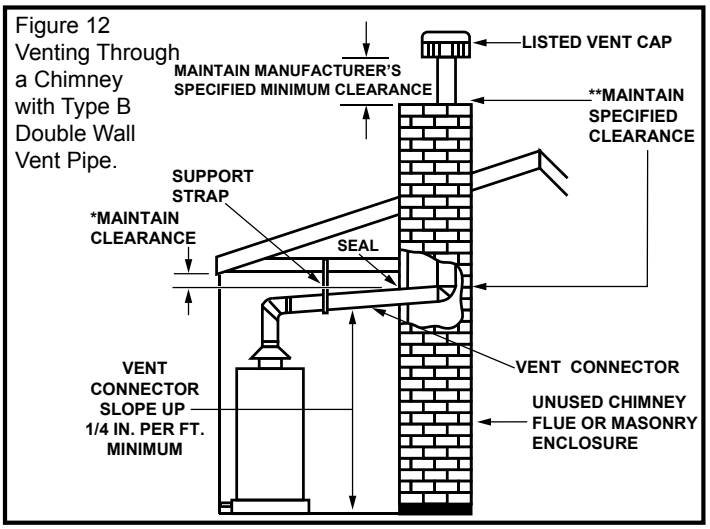

* Maintain vent pipe clearance requirements to local, state and/or the "National Fuel Gas Code", ANSI Z223.1(NFPA 54)-current edition.

** NFPA 211, Standard for Chimneys, Fireplaces, Vents, and Solid Fuel-Burning Appliances states that these chimneys are intended to be installed in accordance with the installation instructions provided with each chimney support assembly. Minimum air space clearance to combustible materials should be maintained as marked on the chimney sections.

Water System Piping

Piping Installation

Piping, fittings, and valves should be installed according to the installation drawing (Figure 13). If the indoor installation area is subject to freezing temperatures, the water piping must be protected by insulation.

The water supply pressure should not exceed 80 psi. If this occurs, a pressure reducing valve with a bypass should be installed in the cold water inlet line. This should be placed on the supply to the entire house in order to maintain equal hot and cold water pressures.

IMPORTANT: Heat cannot be applied to the water fittings on the heater as they may contain nonmetallic parts. If solder connections are used, solder the pipe to the adapter before attaching the adapter to the hot and cold water fittings.

IMPORTANT: Always use a good grade of joint compound and be certain that all fittings are drawn up tight.

1. Install the water piping and fittings as shown in Figure 13. Connect the cold water supply (3/4" NPT) to the fitting marked "C". Connect the hot water supply (3/4" NPT) to the fitting marked "H".

IMPORTANT: Some models may contain energy saving heat traps to prevent the circulation of hot water within the pipes. Do not remove the inserts within the heat traps.

2. The installation of unions in both the hot and cold water supply lines is recommended for ease of removing the water heater for service or replacement.
3. The manufacturer of this water heater recommends installing a mixing valve at each point of use. See Figure 14. These valves reduce the point-of-use temperature of the water by mixing cold and hot water and are readily available for use.
4. If installing the water heater in a closed water system, install an expansion tank in the cold water line as specified under "Closed System/Thermal Expansion" section.
5. Install a shut-off valve in the cold water inlet line. It should be located close to the water heater and be easily accessible. Know the location of this valve and how to shut off the water to the heater.
6. A temperature and pressure relief valve must be installed in the opening marked "Temperature and Pressure (T & P) Relief Valve" on the water heater. A discharge line must be added to the opening of the T&P Relief Valve. Follow the instructions under "Temperature and Pressure Relief Valve" section.
7. After piping has been properly connected to the water heater, remove the aerator at the nearest hot water faucet. Open the hot water faucet and allow the tank to completely fill with water. To purge the lines of any excess air, keep the hot water faucet open for 3 minutes after a constant flow of water is obtained. Close the faucet and check all connections for leaks.

Figure 13
Water Piping Installation

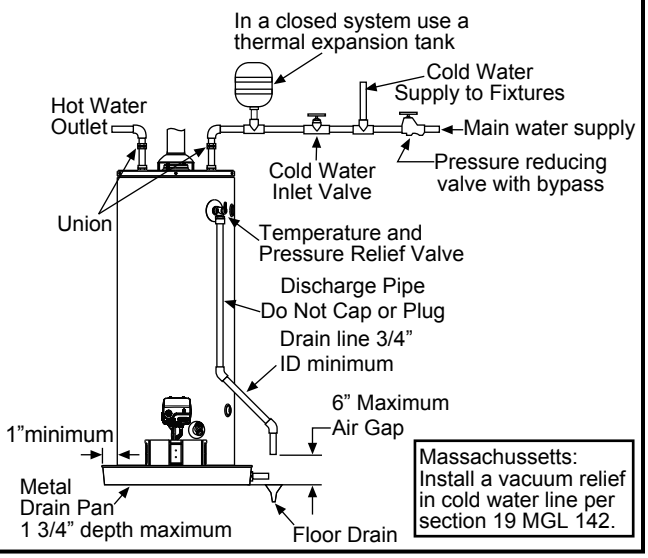

Figure 14
Mixing Valve

Follow the mixing valve manufacturer's instructions.

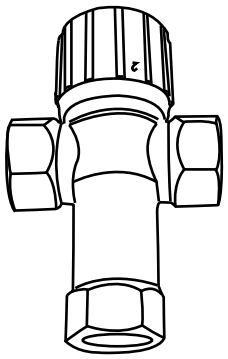

Please note the following:

- The system should be installed only with piping that is suitable for potable (drinkable) water such as copper, CPVC, or polybutylene. This water heater must not be installed using iron piping or PVC water piping.
- Use only pumps, valves, or fittings that are compatible with potable water.
- Use only full flow ball or gate valves. The use of valves that may cause excessive restriction to water flow is not recommended.
- Use only 95/5 tin-antimony or other equivalent solder. Any lead based solder must not be used.
- Piping that has been treated with chromates, boiler seal, or other chemicals must not be used.
- Chemicals that may contaminate the potable water supply must not be added to the piping system.

Closed System/Thermal Expansion

⚠WARNING

Explosion Hazard

If the temperature and pressure relief valve is dripping or leaking, have a qualified person replace it.

Examples of a qualified person include: licensed plumbers, authorized gas company personnel, and authorized service personnel.

Do not plug valve.

Do not remove valve.

Failure to follow these instructions can result in death, or explosion.

As water is heated, it expands (thermal expansion). In a closed system, the volume of water will grow. As the volume of water grows, there will be a corresponding increase in water pressure due to thermal expansion. Thermal expansion can cause premature tank failure (leakage). This type of failure is not covered under the limited warranty. Thermal expansion can also cause intermittent temperature-pressure relief valve operation: water discharged from the valve due to excessive pressure build up. The temperature-pressure relief valve is not intended for the constant relief of thermal expansion. This condition is not covered under the limited warranty.

A properly-sized thermal expansion tank should be installed on all closed systems to control the effects of thermal expansion. Contact a plumbing service agency or your retail supplier regarding the installation of a thermal expansion tank.

Temperature and Pressure Relief Valve

⚠WARNING

Explosion Hazard

If the temperature and pressure relief valve is dripping or leaking, have a qualified person replace it.

Examples of a qualified person include: licensed plumbers, authorized gas company personnel, and authorized service personnel.

Do not plug valve.

Do not remove valve.

Failure to follow these instructions can result in death, or explosion.

Figure 15
Temperature and Pressure Relief Valve Installation

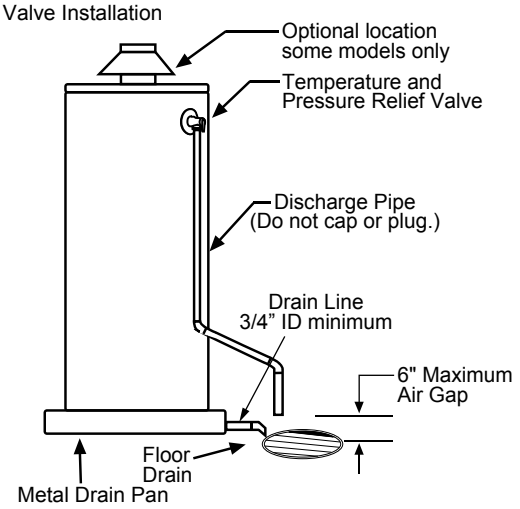

For protection against excessive pressures and temperatures, a temperature and pressure relief valve must be installed in the opening marked "T & P RELIEF VALVE" (see Figure 15). This valve must be design certified by a nationally recognized testing laboratory that maintains periodic inspection of the production of listed equipment or materials as meeting the requirements for Relief Valves and Automatic Shut-off Devices for Hot Water Supply Systems, ANSI Z21.22. The function of the temperature and pressure relief valve is to discharge water in large quantities in the event of excessive temperature or pressure developing in the water heater. The valve's relief pressure must not exceed the working pressure of the water heater as stated on the data plate.

IMPORTANT: Only a new temperature and pressure relief valve should be used with your water heater. Do not use an old or existing valve as it may be damaged or not adequate for the working pressure of the new water heater. Do not place any valve between the relief valve and the tank.

The Temperature & Pressure Relief Valve:

- Must not be in contact with any electrical part.
- Must be connected to an adequate discharge line.
- Must not be rated higher than the working pressure shown on the data plate of the water heater.

The Discharge Line:

- Must not be smaller than the pipe size of the relief valve or have any reducing coupling installed in the discharge line.
- Must not be capped, blocked, plugged or contain any valve between the relief valve and the end of the discharge line.
- Must terminate a maximum of six inches above a floor drain or external to the building. In cold climates, it is recommended that the discharge pipe be terminated at an adequate drain inside the building.
- Must be capable of withstanding 250°F (121°C) without distortion.
- Must be installed to allow complete drainage of both the valve and discharge line.

Special Applications

Combination Space Heating/Potable Water System

Some water heater models are equipped with inlet/outlet tappings suitable for combination water (potable) heating and space heating and not suitable for space heating applications only. If this water heater is to be used to supply both space heating and domestic potable (drinking) water, the instructions listed below must be followed.

- Be sure to follow the manual(s) shipped with the air handler system.
- This water heater is not to be used as a replacement for an existing boiler installation.
- Do not use with piping that has been treated with chromates, boiler seal or other chemicals and do not add any chemicals to the water heater piping.
- If the space heating system requires water temperatures in excess of 120°F, a mixing valve or an anti-scald device should be installed per its manufacturer's instructions in the domestic (potable) hot water supply to limit the risk of scald injury. Also, install mixing valves at each point of use.
- Pumps, valves, piping and fittings must be compatible with potable water.
- A properly installed flow control valve is required to prevent thermosiphoning. Thermosiphoning is the result of a continuous flow of water through the air handler circuit during the off cycle. Weeping (blow off) of the temperature and pressure relief valve (T & P) or higher than normal water temperatures are the first signs of thermosiphoning.

- The domestic hot water line from the water heater should be vertical past any mixing valve or supply line to the air handler to remove air bubbles from the system. Otherwise, these bubbles will be trapped in the air handler heat exchanger coil, reducing the efficiency.
- Do not connect the water heater to any system or components previously used with non-potable water heating appliances when used to supply potable water.

NOTE: Water heaters covered by this manual are suitable for combination water (potable) heating and space heating, but not suitable for space heating applications only.

Some jurisdictions may require a backflow preventer in the incoming cold water line. This may cause the temperature and pressure relief valve on the water heater to discharge or weep due to expansion of the heated water. A diaphragm-type expansion tank suitable for potable water will normally eliminate this weeping condition. Please read and follow the manufacturer's instructions for the installation of such tanks.

Also see "Water System Piping" section for additional instructions on the proper installation and operation of this water heater.

Solar Installation

If this water heater is used as a solar storage heater or as a backup for the solar system, the water supply temperatures to the water heater tank may be in excess of 120°F. A mixing valve or other temperature limiting valve must be installed in the water supply line to limit the supply temperature to 120°F. Also, install mixing valves at each point of use. The unit must be set to Standard Mode (See Operating the Temperature Control System section).

NOTE: Solar water heating systems can often supply water with temperatures exceeding 180°F and may result in water heater malfunction.

Figure 16
Typical Mixing Valve Installation
Combination Space Heating/Potable Water Heating System

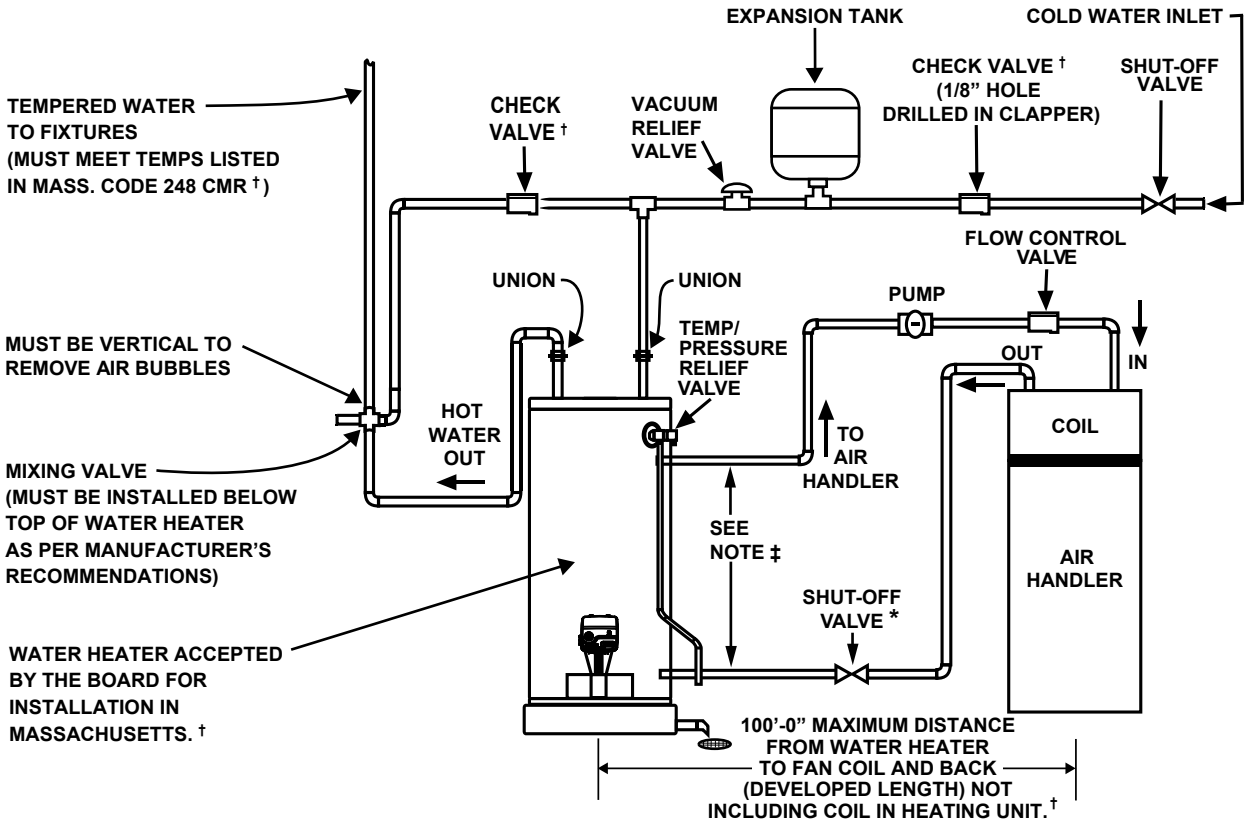

* MASSACHUSETTS INSTALLATION REQUIREMENTS:

1.) CONNECT ELECTRONICALLY-CONTROLLED TIMER TO AN ALL-BRONZE PUMP. PUMP MUST ACTIVATE EVERY 6 HOURS FOR 60 SECONDS. TURN PUMP TIMER OFF BEFORE CLOSING PIPING LOOP SHUT-OFF VALVE.

2.) ALL WATER PIPING MUST BE INSTALLED AND INSULATED IN ACCORDANCE WITH MASSACHUSETTS CODE (248 CMR & 780 CMR).

3.) PIPING LOOP BETWEEN WATER HEATER AND AIR HANDLER MUST BE INSTALLED IN COMPLIANCE WITH 248 CMR.

† REQUIRED FOR MASSACHUSETTS.

‡ PIPING FROM THE TOP OF THE WATER HEATER WITH TEES IS ACCEPTABLE.

Important Information About This Water Heater

This gas water heater was manufactured to voluntary safety standards to reduce the likelihood of a flammable vapor ignition incident. The new technology used in meeting these standards makes this product more sensitive to installation errors. Please review the following checklist and make any required installation upgrades or changes.
Questions? Reference the number on the cover of this manual for service information.

Installation Checklist

Water Heater Location

Water heater location is important and can affect system performance. Please check the following:

- ☐ Installation area free of corrosive elements and flammable materials.
- ☐ Centrally located with the water piping system. Located as close to the gas piping and vent pipe system as possible.
- ☐ Located indoors and in a vertical position. Protected from freezing temperatures.
- ☐ Proper clearances from combustible surfaces maintained and not installed directly on a carpeted floor.
- ☐ Provisions made to protect the area from water damage. Metal drain pan installed and piped to an adequate drain.
- ☐ Sufficient room to service the water heater. See "Clearances and Accessibility" section of this manual.
- ☐ Water heater not located near an air moving device.
- ☐ Is the installed environment dirty (excessive amounts of lint, dirt, dust, etc.)? If so, the flame trap located on the bottom of the water heater will need to be cleaned periodically. Refer to the "Maintenance of your Water Heater" section of this manual for information on cleaning the flame-trap.

Combustion Air Supply and Ventilation

Check for sufficient combustion air supply. Insufficient air for the combustion of gas will result in the flame becoming "lazy", thereby allowing the burner operating temperature to decrease. This causes the gas control to shut off the gas supply. Is the water heater installed in a closet or other small, enclosed space? If so:

- ☐ Are there openings for make-up air to enter and exit the room/area?
- ☐ Are the openings of sufficient size? Remember, if there are other gas-fired or air-consuming appliances in the same room, you need more make-up air. Refer to the "Location Requirements" section of this water heater manual for specific requirements.

Fresh air not taken from areas that contain negative pressure producing devices such as exhaust fans, fireplaces, etc.

- ☐ Is there a furnace/air handler in the same room space as the water heater? If so, has a return air duct system been attached that exits the room? If so, check for leaks on the air duct system. If no air duct system is present, correct immediately by contacting a local Heating, Ventilation, Air-Conditioning & Refrigeration (HVAC-R) authorized service provider.
- ☐ Fresh air supply free of corrosive elements and flammable vapors.
- ☐ Fresh air openings sized correctly with consideration given to the blocking effect of louvers and grilles.
- ☐ Ductwork is the same cross-sectional area as the openings.

Vent Pipe System

Check for proper drafting at the water heater draft hood. Refer to the "Checking the Draft" section of this manual for the test procedure. If the procedure shows insufficient draft is present, please check the following.

- ☐ Draft hood properly installed.
- ☐ Vent connectors securely fastened with screws and supported properly to maintain six inch clearance.
- ☐ Vent connector made of approved material and sized correctly.
- ☐ Vent pipe system installed according to all local and state codes or, in the absence of local and state codes, the "National Fuel Gas Code", ANSI Z223.1(NFPA 54)-current edition.
- ☐ Flue baffle properly positioned in the flue tube.
- ☐ Check the vent system for restrictions/obstructions and check the vent termination height. Refer to the "Air Supply and Ventilation" section of this water heater manual for specific requirements.
- ☐ Recheck for sufficient combustion air supply.

Water System Piping

- ☐ Temperature and pressure relief valve properly installed with a discharge line run to an open drain and protected from freezing.
- ☐ All piping properly installed and free of leaks.
- ☐ Heater completely filled with water.
- ☐ Closed system pressure build-up devices installed.
- ☐ Mixing valves recommended, installed at each point of use per manufacturer's instructions (see "Water Temperature Regulation" section).

Gas Supply and Piping

- ☐ Gas type is the same as that listed on the water heater data plate.
- ☐ Gas line equipped with shut-off valve, union, and sediment trap.
- ☐ Adequate pipe size and approved pipe material.
- ☐ An approved noncorrosive leak detection solution used to check all connections and fittings for possible gas leaks. If such a solution is not available, use a mixture of dish washing soap and water (one part soap to 15 parts water) or children's soap bubble solution. Bubbles forming indicate a leak. Correct any leak found.

TEFLON ® is a registered trademark of E.I. Du Pont De Nemours and Company.

OPERATING YOUR WATER HEATER

Lighting Instructions

Read and understand these directions thoroughly before attempting to light or re-light the pilot. Make sure the viewport is not missing or damaged. (See Figure 23) Make sure the tank is completely filled with water before lighting the pilot. Check the data plate near the gas control valve/ thermostat for the correct gas. Do not use this water heater with any gas other than the one listed on the data plate. If you have any questions or doubts, consult your gas supplier or gas utility company.

Lighting the Pilot:

1. Read and follow the lighting instructions on the water heater's label.
2. Turn the Control Knob to Pilot. Press the Knob in fully and hold it in. (The knob will travel in about 1/4-inch if it is set to Pilot correctly.)
3. Click the Igniter button continuously for up to 90 seconds or until the Status Light begins to blink. If the Status Light does not begin to blink after 90 seconds, STOP. Wait 10 minutes before attempting to relight the Pilot. Repeat these steps 2-3 times, if necessary
   The circuitry in this gas valve requires that you wait 10 minutes between lighting attempts. If the Status Light blinks, release the Control Knob and turn it to the desired setting. ("Hot" is approximately 120°F).

If the Status Light Does Not Blink:

1. Wait 10 minutes before another lighting attempt.
2. If the Status Light did not blink, repeat the lighting procedure by following the lighting instructions on the water heater's label. Remove the outer door
   The Control Knob must be set to Pilot and held in continuously while clicking the igniter button (about once per second for up to 90 seconds). To observe the Pilot, remove the outer door and look through the view port (sight glass). See Figure 23.
3. Continue clicking the Igniter button (for up to 90 seconds) until Pilot lights.
4. Once the Pilot is lit, continue to hold the Control Knob in until the Status Light begins to blink.
5. Release Control Knob and set Knob to desired temperature setting. ("Hot" is approximately 120°F.)
6. Replace the outer door.

If the Pilot Does Not Light:

1. Wait 10 minutes before another lighting attempt. If the pilot does not light, the Igniter may not be sparking or the unit may not be getting gas (or for a new installation, there may still be air in the gas line).
   Each time you click the igniter button, you should be able to see the spark by looking through the view port.See Figure 23. (You may have to darken the room lights to see the spark.) You do not have to push the Control Knob in to check the Igniter button. Simply look through the sight glass while clicking the Igniter button and look for a spark. If you can't see a spark when the Igniter button is clicked, check the wiring connections from the Igniter button and make sure that they are tight.
2. If you see the Igniter spark, try relighting the pilot by following the instructions on the water heater's label. Ensure that the gas supply is tuned on. There may be air in the gas line, and several lighting attempts may be needed to completely fill the line with gas and successfully light the pilot.

WARNING

Explosion Hazard

Replace viewport if glass is missing or damaged.

Failure to do so can result in death, explosion or fire.

If the Pilot Lights but the Status Light Does Not Blink:

1. If the pilot lights, continue to hold the Control Knob in until the Status Light blinks. If the pilot is lit and remains lit for 90 seconds and the Status Light still does not blink, the thermopile connections may be loose or the thermopile may be defective.
2. Wait 10 minutes and try to light the Pilot according to the instructions on the water heater's label.
3. While clicking the Igniter button continuously, the Control Knob must be set to Pilot and held in until the Status Light blinks. Once the Status Light blinks, release the Control Knob and set the Knob to the desired temperature setting. ("Hot" is approximately 120°F.)

⚠ DANGER

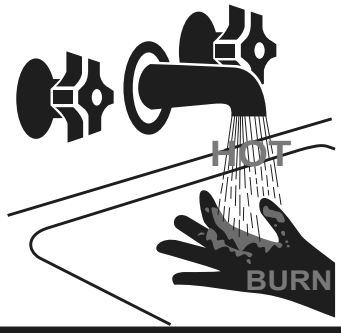

Water temperature over 125ºF can cause severe burns instantly or death from scalds.

Children, disabled and elderly are at highest risk of being scalded.

See instruction manual before setting temperature at water heater.

Feel water before bathing or showering.

Temperature limiting valves are available, see manual.

WATER TEMPERATURE	TIME TO PRODUCE SERIOUS BURNS ON ADULT SKIN
160ºF	About 1/2 second
150ºF	About 1 1/2 seconds
140ºF	Less than 5 seconds
130ºF	About 30 seconds
120ºF	More than 5 minutes

The time to produce serious burns on the skin of infants, children, and the elderly can be even shorter.

See manual for more information about preventing burns from hot water.

Install Thermostatic Mixing Valves

Even if you set the water heater thermostat to a low setting, higher temperatures may occur in certain circumstances. Install Thermostatic Mixing Valves (temperature limiting valves) at each point-of-use to reduce the risk of scalding.

IMPORTANT/IMPORTANTE

Read the manual for complete instructions and safety information. For a free manual, call 1-800-821-2017.

Lea el manual para instrucciones completas e información de seguridad. Manuales gratuitos, etiquetas, o rótulos en español se pueden obtener llamando al 1-800-821-2017.

FOR YOUR SAFETY READ BEFORE LIGHTING

WARNING: If you do not follow these instructions exactly, a fire or explosion may result causing property damage, personal injury or loss of life.

BEFORE LIGHTING: ENTIRE SYSTEM MUST BE FILLED WITH WATER AND AIR PURGED FROM ALL LINES

A. This appliance has a pilot which is lit by a piezo-electric spark gas ignition system. Do **not** open the inner door of the appliance and try to light the pilot by hand.

B. BEFORE LIGHTING smell all around the appliance area for gas. Be sure to smell next to the floor because some gas is heavier than air and will settle on the floor.

WHAT TO DO IF YOU SMELL GAS

- Do not try to light any appliance.
- Do not touch any electric switch; do not use any phone in your building.
- Immediately call your gas supplier from a neighbor's phone. Follow the gas supplier's instructions.
- If you cannot reach your gas supplier, call the fire department.

C. Use only your hand to push in or turn the gas control knob. Never use tools. If the knob will not push in or turn by hand, do not try to repair it, call a qualified service technician. Force or attempted repair may result in a fire or explosion.

D. Do not use this appliance if any part has been underwater. Immediately contact a qualified installer or service agency to replace a flooded water heater. Do not attempt to repair the unit! It must be replaced!

E. DO NOT USE THIS APPLIANCE IF THERE HAS BEEN AN IGNITION OF VAPORS. Immediately call a qualified service technician to inspect the appliance. Water heaters subjected to a flammable vapors ignition will show a discoloration on the air intake grid and require replacement of the entire water heater.

LIGHTING INSTRUCTIONS

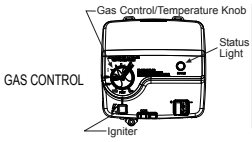

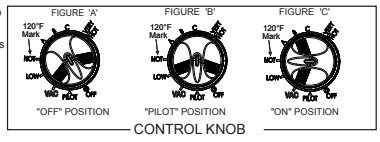

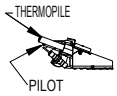

1. STOP! It is imperative that you read all safety warnings before lighting the pilot.
2. Turn the gas control/temperature knob counterclockwise ↺ to the "OFF" setting.
3. Wait ten (10) minutes to clear out any gas. If you then smell gas, STOP! Follow " B" in the safety information above on this label. If you do not smell gas, go to the next step.
4. Turn the gas control/temperature knob clockwise ↻ to "PILOT". See Figure 'B'.
5. Press the gas control/temperature knob all the way in and hold it in. The knob should travel in about 1/4 inch if it is set to "PILOT" correctly.
   While holding the gas control/temperature knob in, click the igniter button continuously (about once a second) for up to 90 seconds or until Status Light begins to blink.
6. When the status light starts blinking, release the gas control/temperature knob. Set the gas control/temperature knob to the desired setting. See Figure 'C'.
   If the status light does not start blinking within 90 seconds, repeat steps 2 through 5 up to THREE (3) times, waiting 10 minutes between lighting attempts.
   The circuitry in this advanced gas valve requires that you wait 10 minutes between lighting attempts.
   If the status light turns a solid color, release the gas control/temperature knob and repeat steps 2 through 5 (waiting 10 minutes before attempting to relight the pilot).
   If the status light does not start blinking after three lighting attempts, turn the gas control/temperature knob to "OFF" and call a qualified service technician or your gas supplier.

TO TURN OFF GAS TO APPLIANCE

1. Turn the gas control/temperature knob counterclockwise ↺ to the "OFF" setting. The status light will stop blinking and stay on for a short time after the water heater is turned off. See Figure 'A'.

Checking the Draft

⚠WARNING

Burn Hazard

Do not touch vent.

Doing so can result in burns.

After successfully lighting the water heater, allow the unit to operate for 15 minutes and check the drafthood relief opening for proper draft. Make sure all other appliances in the area are operating and all doors are closed when performing the draft test. Pass a match flame around the relief opening of the drafthood. A steady flame drawn into the opening indicates proper draft. If the flame flutters or is blown out, combustion products are escaping from the relief opening. If this occurs, do not operate the water heater until proper adjustments or repairs are made to the vent pipe system and/or air supply requirements.

Figure 17

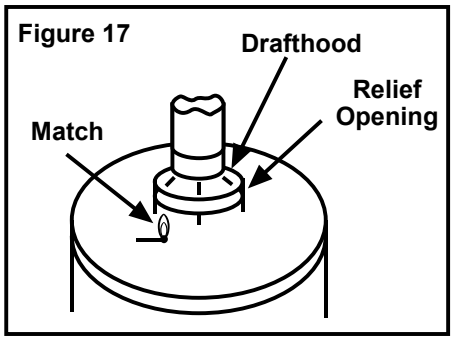

Burner Flames

Inspect the burner flames through the viewport. Flames should be very small with a blue haze and small amounts of yellow or orange at the edges. After several minutes of operation, the burner screen may glow red. If large flames are observed at any time, shut-off unit and call a qualified person.

Figure 18
Flame Characteristics

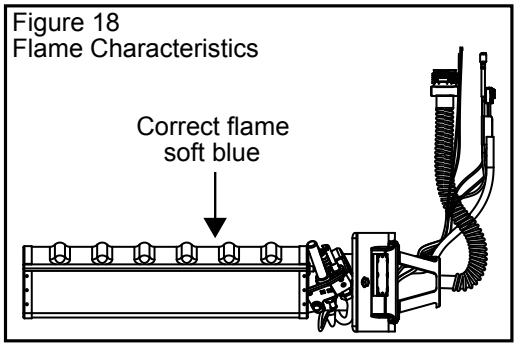

Water Temperature Stacking

Stacking occurs when a series of short draws of hot water (3 gallons or less) are taken from the water heater tank. This causes increased cycling of the burner and can result in increased water temperatures at the hot water outlet.

This water heater's temperature control has been designed to accurately regulate the water temperature. However, under certain operating conditions, the water temperature may temporarily exceed the dial setting. Consequently, in addition to setting the temperature no higher than 120°F, we recommend the installation of a mixing valve at each point of use to further reduce the risk of scald injury. These devices can be obtained from a plumbing service agency or your retail supplier.

Emergency Shut Down

IMPORTANT: Should overheating occur or the gas supply fails to shut off, turn off the water heater's manual gas control valve and call a qualified person.

Water Temperature Regulation

⚠WARNING

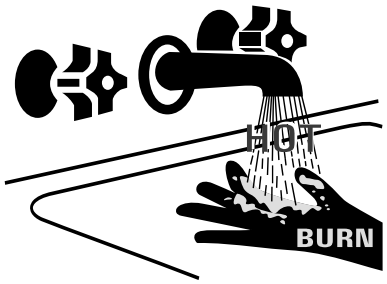

Water temperature over 125°F can cause severe burns instantly or death from scalds.

Children, disabled and elderly are at highest risk of being scalded.

Feel water before bathing or showering.

Temperature limiting valves are available.

The thermostat is adjusted to the pilot position when it is shipped from the factory. Water temperature can be regulated by moving the temperature dial to the preferred setting. The preferred starting point is 120°F at the "HOT" setting. Align the knob with the desired water temperature as shown in Figure 19A. There is a hot water scald potential if the thermostat is set too high.

NOTE: Temperatures shown on the gas control valve/ thermostat are approximates. The actual temperature of the heated water may vary.

IMPORTANT: Adjusting the thermostat past the 120°F bar on the temperature dial will increase the risk of scald injury. Hot water can produce first degree burns within:

Table 4:

Water Temperature °F	Time for 1st Degree Burn (Less Severe Burns)	Time for Permanent Burns 2nd & 3rd Degree (Most Severe Burns)
110	(normal shower temp.)	
116	(pain threshold)	
116	35 minutes	45 minutes
122	1 minute	5 minutes
131	5 seconds	25 seconds
140	2 seconds	5 seconds
149	1 second	2 seconds
154	instantaneous	1 second

(U.S. Government Memorandum, C.P.S.C., Peter L. Armstrong, Sept. 15,1978)

Figure 19A
Gas Control Valve/Thermostat Settings

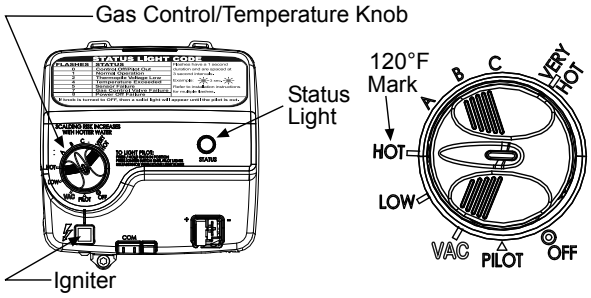

NOTE: During low demand periods when hot water is not being used, a lower thermostat setting will reduce energy losses and may satisfy your normal hot water needs.

If hot water use is expected to be more than normal, a higher thermostat setting may be required to meet the increased demand. When leaving your home for extended periods (vacations, etc.) turn the temperature dial to the vacation (VAC) setting. This will maintain the water at low temperatures with minimum energy losses and prevent the tank from freezing during cold weather.

Operating the Temperature Control System

Water Temperature Adjustment

The water temperature setting can be adjusted from 55°F to 155°F. Turn the Gas Control/Temperature Knob to the desired setting/temperature.

NOTE: The temperatures indicated are approximates. The actual temperature of the heated water may vary. Also, some models are certified for 180°F outlet temperatures. See the Data Plate on the front of the water heater for the maximum outlet temperature.

Operating Modes and Settings

The gas control valve has two different operating modes: Standard and Vacation.

Standard mode allows you to adjust the water temperature to your desired setting.

Vacation (VAC) mode sets the thermostat at approximately 55°F and is recommended when not using hot water for an extended period of time. The VAC setting also reduces energy losses and keeps the tank from freezing during cold weather, but it can cause a Hydrogen gas build up in the water system. See caution on page 2.

NOTE: The actual temperature of the water in most installations will be greater than 55°F due to the surrounding environment and the pilot flame.

Status Light Codes

Normal Flashes:

- 0 Flashes Indicates Control Off/Pilot Out.
- 1 Flash Indicates Normal Operation.
- Continuous Light indicates the gas control valve/thermostat is shutting down.

Diagnostic Flashes: If the water heater is not working, look for the following diagnostic flashes after lighting the pilot.

2 Flashes	Indicates thermopile voltage is low.
4 Flashes	Indicates overheat failure.
5 Flashes	Indicates water temperature sensor failure.
7 Flashes	Indicates electronic control failure.
8 Flashes	See “Status Light Code Troubleshooting Chart.”
9 Flashes	Indicates chamber temperature sensor circuit is open or shorted.
10 Flashes	Indicates an LDO occurrence was detected in the combustion chamber (contaminants).

Figure 19B: Status Codes

List of status codes are shown at top of gas control valve/thermostat.

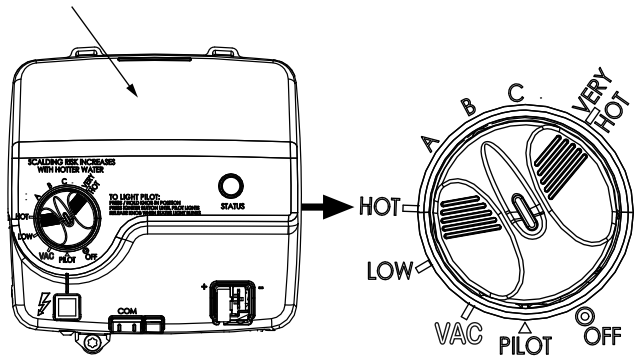

Operational Conditions

Condensation

Moisture from the products of combustion condenses on the tank surface and the outside jacket of the water heater and forms drops of water which may fall onto the burner or other hot surfaces. This will produce a “sizzling” or “frying” noise. **NOTE:** This condensation is normal and should not be confused with a leaking tank. Condensation may increase or decrease at different times of the year.

High efficient energy saver water heaters will produce larger amounts of condensation on initial start-up or when a large amount of hot water is being used. **NOTE:** Do not confuse this with a “tank leak”. Once the water reaches a temperature of 120°F and the tank warms up (usually 1-2 hours), the condensation will stop.

IMPORTANT: It is always recommended that a suitable metal drain pan be installed under the water heater to protect the area from water damage resulting from normal condensation production, a leaking tank or piping connections. Refer to “Location Requirements” on page 4. Under no circumstances is the manufacturer to be held responsible for any water damage in connection with this water heater.

Water Heater Sounds

During the normal operation of the water heater, sounds or noises may be heard. These noises are common and may result from the following:

1. Normal expansion and contraction of metal parts during periods of heat-up and cool-down.
2. Condensation causes sizzling and popping within the burner area and should be considered normal.
3. Sediment buildup in the tank bottom will create varying amounts of noise and may cause premature tank failure. Drain and flush the tank as directed under “Draining and Flushing”.

Smoke/Odor

The water heater may give off a small amount of smoke and odor during the initial start-up of the unit. This is due to the burning off of oil from metal parts of a new unit and will disappear after a few minutes of operation.

Safety Shut-off

This water heater is designed to automatically shut-off in the event of the following:

1. The pilot flame is extinguished for any reason.
2. The water temperature exceeds 189°F (87°C).
3. Excessive contaminants in the combustion chamber.
4. The ignition of flammable vapors.

A thermopile is used to determine if a pilot flame is present and will shut off the gas supply to the main burner and pilot if the flame is absent. This unit is also equipped with a combustion chamber temperature sensor that will shut off the gas supply to the burner if poor combustion is sensed (caused by a blocked vent or insufficient combustion air). If the gas control valve/thermostat shuts off the gas supply, check the diagnostic flash code and refer to the "Status Light Code Troubleshooting Chart." If necessary, also refer to the "Troubleshooting Chart."

IMPORTANT: Correct any issues prior to resetting the gas control valve/thermostat. Reference the telephone number on the cover of this manual for service information.

Reset the system by following these steps: 1.) Turn the temperature adjustment knob to OFF. 2.) Unplug the thermopile plug from the gas control valve/thermostat. 3.) Wait for about three minutes. 4.) Plug the thermopile plug back into the gas control valve/thermostat. 5.) Turn the temperature adjustment knob to PILOT and restart the water heater as directed in this manual.
A temperature limit switch or ECO (Energy Cut Off) sensor located in the gas control valve\thermostat is used to shut off the water heater if the water temperature exceeds 189°F (87°C).

The Diagnostic Status Light will flash a code indicating an "Overheat Failure" (4 Flashes). See "Operating the Temperature Control System." If the ECO has functioned the gas control valve/thermostat should be replaced by a qualified person. Contact your local dealer for service information.

Anode Rod/Water Odor

Each water heater contains at least one anode rod, which will slowly deplete (due to electrolysis) prolonging the life of the water heater by protecting the glass-lined tank from corrosion. Adverse water quality, hotter water temperatures, high hot water usage, hydronic heating devices, and water softening methods can increase the rate of anode rod depletion. Once the anode rod is depleted, the tank will start to corrode, eventually developing a leak.

Certain water conditions will cause a reaction between the anode rod and the water. The most common complaint associated with the anode rod is a "rotten egg smell" produced from the presence of hydrogen sulfide gas dissolved in the water.
IMPORTANT: Do not remove this rod permanently as it will void any warranties. A special anode rod may be available if water odor or discoloration occurs.
NOTE: This rod may reduce but not eliminate water odor problems. The water supply system may require special filtration equipment from a water conditioning company to successfully eliminate all water odor problems.

Artificially softened water is exceedingly corrosive because the process substitutes sodium ions for magnesium and calcium ions. The use of a water softener may decrease the life of the water heater tank.

The anode rod should be inspected after a maximum of three years and annually thereafter until the condition of the anode rod dictates its replacement.
NOTE: artificially softened water requires the anode rod to be inspected annually.

The following are typical (but not all) signs of a depleted anode rod:

- The majority of the rods diameter is less than 3/8".
- Significant sections of the support wire (approx. 1/3 or more of the anode rod's length) are visible.

If the anode rod show signs of either or both it should be replaced. **NOTE:** Whether re-installing or replacing the anode rod, check for any leaks and immediately correct if found.

Figure 20:
Anode Rod Depletion

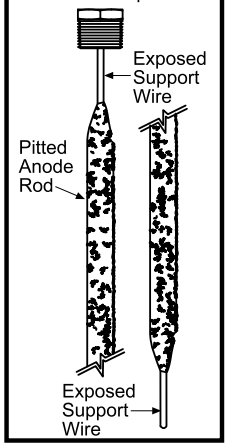

In replacing the anode:

1. Turn off gas supply to the water heater.
2. Shut off the water supply and open a nearby hot water faucet to depressurize the water tank.
3. Drain approximately 5 gallons of water from tank. (Refer to "Draining and Flushing" for proper procedures). Close drain valve.
4. Remove old anode rod.
5. Use Teflon® tape or approved pipe sealant on threads and install new anode rod.
6. Turn on water supply and open a nearby hot water faucet to purge air from water system.
7. Check for any leaks and immediately correct any if found.
8. Restart the water heater as directed in this manual. See the Repair Parts Illustration for anode rod location.

TEFLON ® is a registered trademark of E.I. Du Pont De Nemours and Company.

MAINTENANCE OF YOUR WATER HEATER

Draining and Flushing

It is recommended that the tank be drained and flushed every 6 months to remove sediment which may build up during operation. The water heater should be drained if being shut down during freezing temperatures. To drain the tank, perform the following steps:

1. Turn off the gas to the water heater at the manual gas shut-off valve.
2. Open a nearby hot water faucet until the water is no longer hot.
3. Close the cold water inlet valve.
4. Connect a hose to the drain valve and terminate it to an adequate drain or external to the building.
5. Open the water heater drain valve and allow all of the water to drain from the tank. Flush the tank with water as needed to remove sediment.
6. Close the drain valve, refill the tank, and restart the heater as directed in this manual.

If the water heater is going to be shut down for an extended period, the drain valve should be left open.

IMPORTANT: Condensation may occur when refilling the tank and should not be confused with a tank leak.

Routine Preventative Maintenance

At least annually, a visual inspection should be made of the venting and air supply system, piping systems, main burner, pilot burner, and Flame-trap. Check the water heater for the following:

- Obstructions, damage, or deterioration in the venting system. Make sure the ventilation and combustion air supplies are not obstructed.
- Build up of soot and carbon on the main burner and pilot burner. Check for a soft blue flame.
- Leaking or damaged water and gas piping.
- Presence of flammable or corrosive materials in the installation area.
- Presence of combustible materials near the water heater.
- After servicing this water heater, check to make sure it is working properly. (See Operating Your Water Heater section of this manual.)

IMPORTANT: If you lack the necessary skills required to properly perform this visual inspection, you should not proceed, but get help from a qualified person.

Temperature and Pressure Relief Valve

⚠WARNING

Explosion Hazard

If the temperature and pressure relief valve is dripping or leaking, have a qualified person replace it.

Examples of a qualified person include: licensed plumbers, authorized gas company personnel, and authorized service personnel.

Do not plug valve.

Do not remove valve.

Failure to follow these instructions can result in death, or explosion.

Figure 21

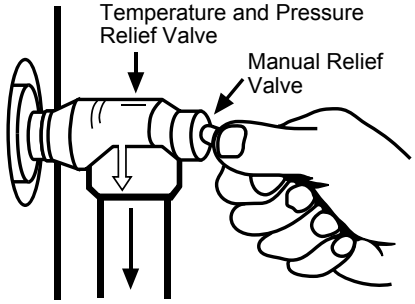

Manually operate the temperature and pressure relief valve at least once a year to make sure it is working properly. To prevent water damage, the valve must be properly connected to a discharge line which terminates at an adequate drain. Standing clear of the outlet (discharged water may be hot), slowly lift and release the lever handle on the temperature and pressure relief valve to allow the valve to operate freely and return to its closed position. If the valve fails to completely reset and continues to release water, immediately shut off the manual gas control valve and the cold water inlet valve and call a qualified person.

⚠ **WARNING!** When manually operating the temperature-pressure relief valve, make sure that no one is in front of or around the discharge outlet. The water may be extremely hot and could cause severe burns. Also ensure that the water discharge will not cause property damage.

Replacement Parts

IMPORTANT: The following maintenance procedures are for the Flame Guard™ Safety System components and should be performed by a qualified person.

Replacement parts may be ordered through your plumber or the local distributor. Parts will be shipped at prevailing prices and billed accordingly. When ordering replacement parts, always have the following information ready:

1. model, serial, and product number
2. type of gas
3. item number
4. parts description

See pages 32-33 for a list of available repair parts.

Removing the Burner Door Assembly

1. Turn off the gas to the water heater at the manual shut-off valve (Figure 3).
2. Before performing any maintenance, it is important to turn off the gas supply to the water heater at the manual gas shut-off valve. This valve is typically located beside the water heater. Note the position of the shut-off valve in the open/on position, then proceed to turn it off (Figure 3).
3. Remove the outer door.
4. Remove the two screws (1/4” nut driver) securing the burner door assembly to the combustion chamber (Figure 23).
5. Disconnect the pilot tube (7/16” wrench), the igniter wire from the igniter lead wire, and manifold tube (3/4” wrench) at the gas control valve/thermostat. Disconnect the sensor wires (lift white lever outward, then gently pull the plug downward). Also, use needle nose pliers to disconnect the red (+) and white (-) thermopile wires from the gas control valve/thermostat. See Figures 22 & 23.

Figure 22
Gas Control Valve/ Thermostat

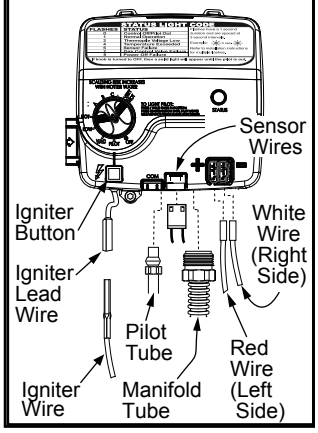

Figure 23
Burner Assembly Removal

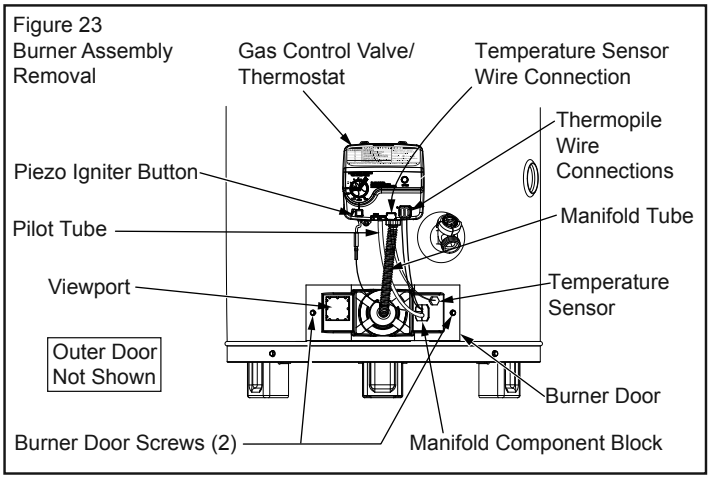

6. Grasp the manifold tube and push down slightly to free the manifold, pilot tube, and thermopile.
7. Carefully remove the burner door assembly from the burner compartment.

   NOTE: Be sure not to damage internal parts.

Figure24A
NaturalGas(LowNox)
Burner Door Assembly

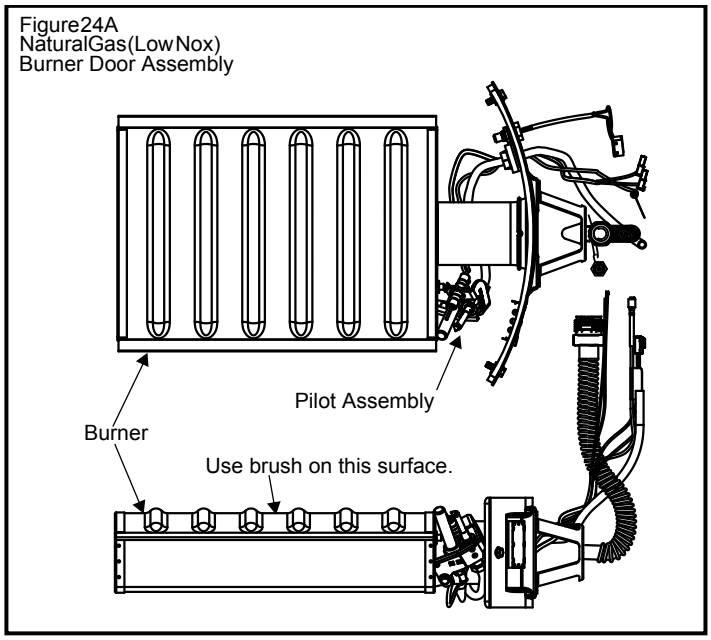

Figure24B
NaturalGas(LowNox)
Burner Door Assembly
50K Models

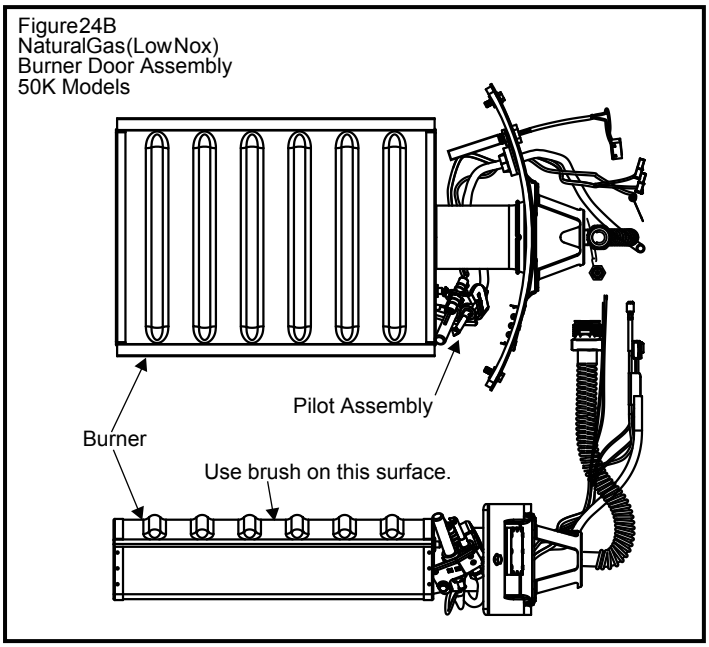

Natural Gas Burner (Ultra Low Nox)

Check the burner to see if it is dirty or clogged. The burner may be cleaned with soft paint brush (Figure 24). Do not use a wire brush or any tool that may damage the burner screen. Important: Do not use the burner if the burner screen is damaged. NOTE: Damage may be rips or holes in the burner screen. Discoloration is normal.

Replacing the Pilot/Thermopile Assembly

1. Remove the burner assembly. See Removing the Burner Door Assembly Section.
2. Lift the retainer clip straight up from the back of the manifold component block (using a flat-blade screwdriver), then remove the manifold component block from the burner door (Figure 25). IMPORTANT: Be careful not to bend or alter the position of the pilot tube. Note the placement/order of the wires in the manifold component block.

Figure 25
Manifold Component Block Assembly

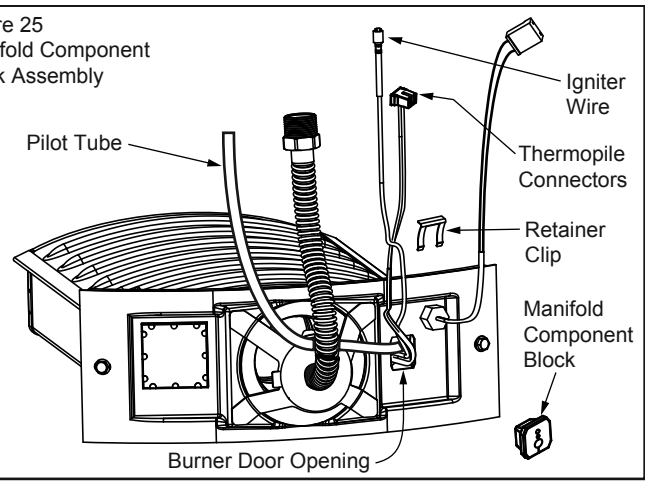

3. Turn the burner door assembly over until the pilot/thermopile assembly is easily accessible.
4. Use a 7/16” wrench to loosen the nut securing the pilot tube to the pilot (right-hand threads). IMPORTANT: Be careful not to bend or alter the position of the pilot/thermopile assembly components during the following steps. To prevent any bending, use a pair of pliers to steady the pilot/thermopile assembly bracket.
5. Locate and remove the screw attaching the pilot/thermopile assembly to the burner and keep it for reuse later. IMPORTANT: Be careful not to bend or alter the position of the pilot/thermopile assembly components.

Figure 26
Pilot/Thermopile Assembly

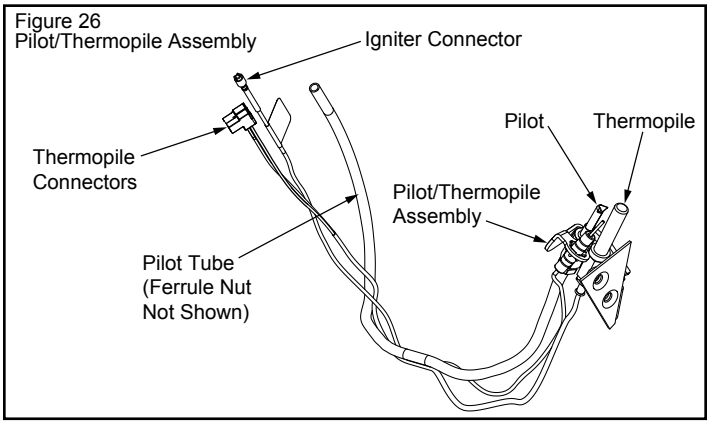

6. Install the new pilot/thermopile assembly by routing the new igniter wire and new thermopile wire through the opening in the burner door (See Figure 25).
7. Use the screw removed earlier to attach the new pilot/thermopile assembly to the burner door assembly. **NOTE:** Remove the pilot nut included with the new pilot/thermopile. IMPORTANT: Once the pilot nut is removed the pilot orifice MUST be kept in the pilot.
8. Connect the pilot tube to the new pilot and tighten the nut securely. To prevent any bending, use a pair of pliers to steady the pilot bracket. IMPORTANT: Keep the pilot orifice in the pilot when making the connection. DO NOT operate the water heater without the pilot orifice installed.
9. Reinstall the manifold component block in the burner door. (See Figures 25). Be sure that the thermopile wires are positioned through the top opening of the manifold component block. The igniter wire should be positioned through the middle opening and the pilot tube through the bottom opening.
10. Follow the “Replacing the Burner Door Assembly” instructions to replace the burner door assembly.

Replacing the Pilot/Thermopile Assembly (50K Models)

1. Remove the burner assembly as directed previously.
2. Lift the retainer clip straight up from the back of the manifold component block (using a flat-blade screwdriver), then remove the manifold component block from the burner door assembly (Figure 27).

Figure 27
Manifold Component Block Assembly (50K Models)

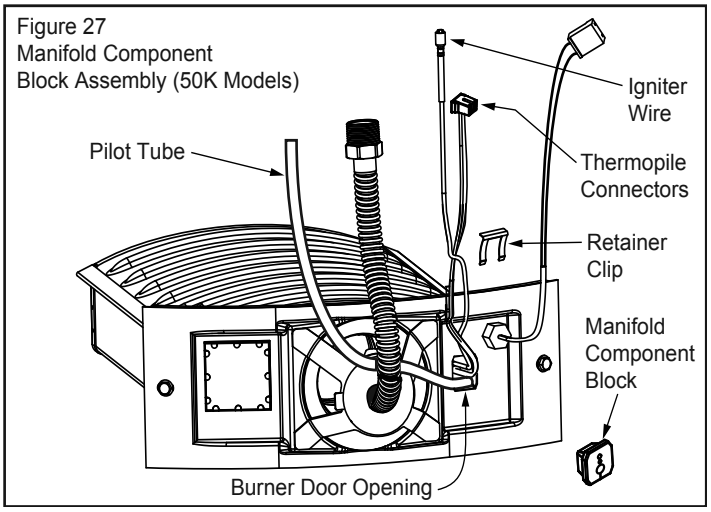

3. Locate and remove the screw attaching the pilot/thermopile assembly to the burner and keep it for reuse later. IMPORTANT: Be careful not to bend or alter the position of the pilot/thermopile assembly components.
4. Pull the pilot/thermopile assembly from the burner door assembly. **IMPORTANT:** Be careful not to bend or alter the position of the pilot assembly components.
5. Use the old pilot tube as a guide and bend the new pilot tube to match the old one. Make only the bends closest to the pilot before going to the next step.

Figure 28
Pilot/Thermopile Assembly
(50K Models)

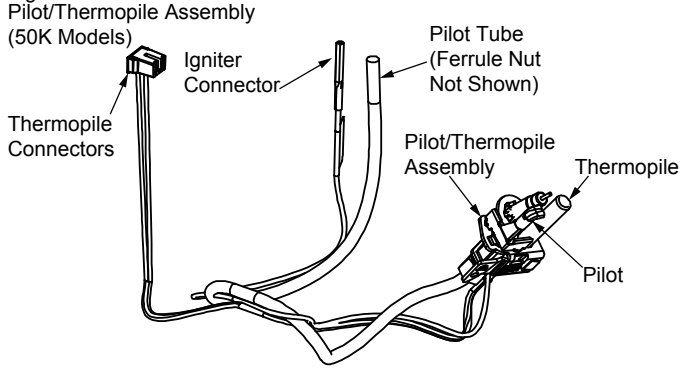

6. Push the new pilot/thermopile assembly connectors through the opening in the burner door (See Figure 27). Do not to scrape or nick the wires during installation. **IMPORTANT:** DO NOT USE PILOT/THERMOPILES WITH FIBERGLASS SLEEVES. The replacement kit does not contain a fiberglass sleeve over the pilot/ thermopile wires.
7. Attach the pilot assembly to the Burner Door Assembly.
8. Position the new thermopile wires through the top opening of the manifold component block (Figure 27). Be sure that the igniter wire is positioned through the middle opening of the manifold component block. Position the pilot tube through the bottom opening of the manifold component block.
9. See “Replacing the Burner Door Assembly” section. **NOTE:** Use the ferrule nut supplied with the new pilot/ thermopile assembly when connecting the pilot tube to the gas control valve/thermostat.

External Inspection & Cleaning of the Flame-trap

Although not likely to occur, if debris collects on the flame-trap, use a vacuum, compressed air, or a soft bristle brush to remove it.
NOTE: If unable to inspect or clean the flame trap from underneath, follow the “Cleaning the Combustion Chamber and Flame-trap” section instructions.

Figure 29
Flame-trap visual inspection

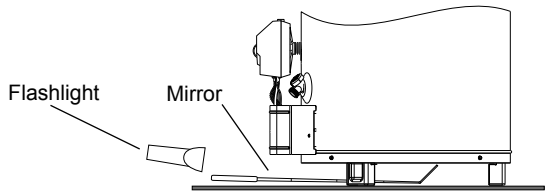

Cleaning the Combustion Chamber and Flame-trap

1. Follow procedure outlined in “Removing the Burner Door Assembly”.
2. Use a vacuum cleaner/shop vac to remove all loose debris in the combustion chamber (Figure 30). Use compressed air to clear any dust or debris that may have accumulated in the flame-trap.
3. Reassemble following the procedure under “Replacing the Burner Door Assembly”.

Replacing the Burner Door Assembly

⚠WARNING

Explosion Hazard

Tighten both burner door screws securely.

Remove any fiberglass between gasket and combustion chamber.

Replace viewport if glass is missing or damaged.

Replace manifold component block if missing or removed.

Replace door gasket if damaged.

Failure to follow these instructions can result in death, explosion, or fire.

1. Check the door gasket for damage or imbedded debris prior to installation.
2. Inspect the viewport for damage and replace as required.
3. Insert the burner assembly into the burner compartment, making sure that the burner assembly sits firmly against the burner bracket inside the combustion chamber (Figure 30). **IMPORTANT:** Do not to scrape or nick the wires during installation.
4. Inspect the door gasket and make sure there is no fiberglass insulation between the gasket and the combustion chamber.
5. Replace the two screws which secure the burner assembly to the combustion chamber and tighten securely. There should be no space between the gasket part of the burner door and combustion chamber. **IMPORTANT:** Do not operate the water heater

if the door gasket does not create a seal between the burner door and the combustion chamber.

6. Reconnect the manifold tubing (3/4” wrench), pilot tubing (7/16” wrench), temperature sensor wires, and thermopile wires to the gas control valve/thermostat. (See Figure 22 for the correct position of the thermopile wires.) Do not cross-thread or apply any thread sealant to the fittings. **NOTE:** If installing a new pilot tube install the provided ferrule nut in the gas control valve/ thermostat at the pilot location, hand tight only. Next, insert the pilot tube into the ferrule nut until it bottoms out. Hold the tube in this position. Tighten the ferrule nut with a 7/16” wrench until the crimp connection seals to the pilot tube. Continue to tighten until the nut is tight in the gas control valve/thermostat.
7. Reconnect the igniter wire.
8. Turn the main gas supply on and check the gas supply connections for leaks. Use an approved noncorrosive leak detection solution. If such a solution is not available, use a mixture of hand dish washing soap and water (one part soap to 15 parts water) or childrens’ soap bubble solution. Bubbles forming indicate a leak. Correct any leak found.
9. Follow the “Lighting Instructions” on page 17.
10. With the pilot and main burner lit, check the manifold tube and pilot tube connections for leaks. Correct any leak found. Use an approved noncorrosive leak detection solution. **IMPORTANT:** All leaks must be fixed immediately.
11. Replace the outer door.

Figure 30
Combustion Chamber

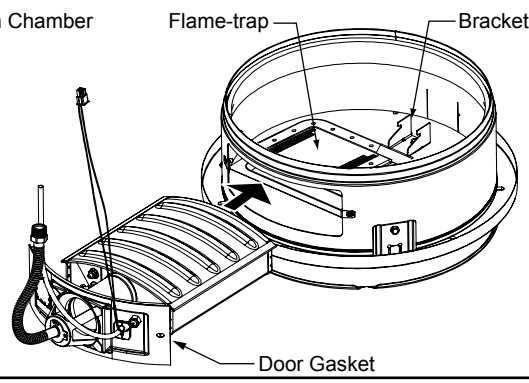

Piezoelectric Igniter System

The piezoelectric igniter system consists of the igniter button, electrode, and wire. The pilot is ignited by an electric spark generated when the igniter button is pressed. (See Figure 31). Use only factory authorized piezoelectric igniter parts for replacement.

Figure 31
Gas Igniter Assembly

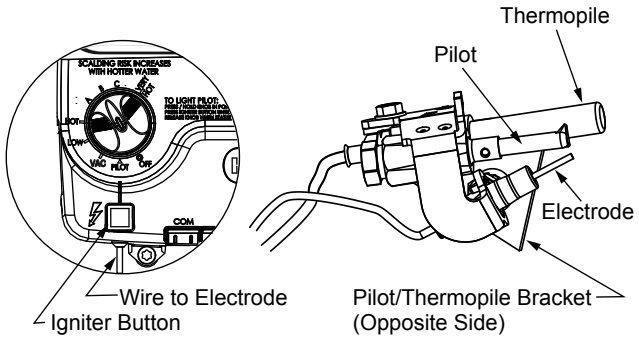

Testing the Igniter System

Turn off the gas to the water heater at the manual gas shut-off valve. Watch the electrode tip while activating the igniter. A visible spark should jump from the electrode. To avoid shock, do not touch the burner or any metal part on the pilot or pilot assembly. If no spark is visible, check the wire connections and make sure the electrode is not broken. Replace the igniter if defective. Dirt and rust on the pilot or electrode tip can prevent the igniter spark. Wipe clean with a damp cloth and dry completely. Rust can be removed from the electrode tip and metal surfaces by lightly sanding with an emery cloth or fine grit sandpaper.

Removing and Replacing the Gas Control Valve/Thermostat

Removing the Gas Control Valve/Thermostat:

1. Turn the gas control/temperature knob to the "OFF" position (Figure 19A).
2. Turn off the gas at the manual shut-off valve on the gas supply pipe (Figure 3).
3. Drain the water heater. Refer to the section on "Draining and Flushing" and follow the procedure.
4. Disconnect the igniter wire from the igniter lead wire. Disconnect the temperature sensor wire, then use needle nose pliers to disconnect the red (+) and white (-) thermopile wires. Disconnect the pilot tube (7/16" wrench) and manifold tube (3/4" wrench) at the gas control valve/thermostat (Figure 22). Refer to "Gas Piping" (Figure 3) and disconnect the ground joint union in the gas piping. Disconnect the remaining pipe from the gas control valve/thermostat.
5. To remove the gas control valve/thermostat, thread a 4" section of gas pipe into the inlet and use it to turn the gas control valve/thermostat (counterclockwise.) Do not use a pipe wrench or equivalent to grip body. Damage may result. Do not insert any sharp objects into the inlet or outlet connections. Damage to the gas control valve/thermostat may result.

Gas Control Valve/Thermostat:
To replace the gas control valve/thermostat, reassemble in reverse order. When replacing the gas control valve/thermostat, thread a 4" section of gas pipe into the inlet and use it to turn the gas control valve/thermostat (clockwise.) DO NOT OVER TIGHTEN, damage may result.

- Be sure to use approved Teflon® tape or pipe joint compound on the gas piping connections and fitting on the back of the gas control valve that screws into the tank.
- Be sure to remove the pilot ferrule nut from the new gas control valve/thermostat.
- Turn the main gas supply on and check the gas supply connections for leaks. Use an approved noncorrosive leak detection solution. If such a solution is not available, use a mixture of hand dish washing soap and water (one part soap to 15 parts water) or childrens' soap bubble solution. Bubbles forming indicate a leak. Correct any leak found.
- Be sure tank is completely filled with water before lighting and activating the water heater. Follow the "Lighting Instructions" on page 17.
- With the pilot and main burner lit, check the manifold tube and pilot tube connections for leaks. Correct any leak found.
- If additional information is required, reference the number on the cover of this manual for service information.

TEFLON® is a registered trademark of E.I. Du Pont De Nemours and Company.

Flame Guard™ Safety System Operational Checklist

1. Burner door gasket properly sealed.
2. Viewport not damaged or cracked.
3. Flame-trap free of debris and undamaged.
4. Manifold component block properly installed.
5. No leaks at pilot and manifold connection.
6. Burner door screws securely tightened.

TROUBLESHOOTING CHART

PROBLEM	POSSIBLE CAUSE(S)	CORRECTIVE ACTION
BURNER WILL NOT IGNITE	1. Pilot not lit 2. Thermostat set too low 3. No gas 4. Dirt in the gas lines 5. Pilot line clogged 6. Main burner line clogged 7. Non-functioning thermopile 8. Non-functioning thermostat 9. Heater installed in a confined area	1. Light pilot 2. Turn temp. dial to desired temperature 3. Check with gas utility company 4. Notify utility-install trap in gas line 5. Clean, locate source and correct 6. Clean, locate source and correct 7. Replace thermopile 8. Replace thermostat 9. Provide fresh air ventilation
SMELLY WATER	1. Sulfides in the water	1. Replace the anode with a special anode
BURNER FLAME YELLOW-LAZY	1. Insufficient secondary air 2. Low gas pressure 3. Flue clogged 4. Main burner line clogged 5. Heater installed in a confined area 6. Obstruction in main burner orifice	1. Provide ventilation to water heater 2. Check with gas utility company 3. Clean, locate source and correct 4. Clean, locate source and correct 5. Proper fresh air ventilation 6. Clean or replace orifice
PILOT WILL NOT LIGHT OR REMAIN LIT	1. Non-functioning igniter 2. Thermopile connection loose 3. Air in gas line 4. Proper Lighting Sequence not followed. Gas Control / Temperature Knob was not held in for sufficient time. 5. Low gas pressure 6. No gas 7. Dirt in gas lines 8. Cold drafts	1. Replace igniter pilot assembly 2. Seat connector firmly in socket 3. Bleed the air from the gas line 4. Do not attempt to relight if the status light is lit and the pilot flame is not visible through the view port. Wait until the status light is no longer lit, then follow lighting instructions on the water heater. 5. Check with gas utility company 6. Check with gas utility company 7. Notify utility-install sediment trap in gas line 8. Locate source and correct

PROBLEM	POSSIBLE CAUSE(S)	CORRECTIVE ACTION
PILOT WILL NOT LIGHT OR REMAIN LIT (continued)	9. ECO switch open 10. Pilot line or orifice clogged 11. Non-functioning thermopile 12. Air for combustion obstructed 13. Flammable vapors incident, Flame Guard™ function utilized	9. Replace gas control valve/thermostat 10. Clean, locate source and correct 11. Replace thermopile 12. See maintenance section for inspection and cleaning of flame trap 13. Replace water heater, eliminate flammable vapors source. Reference the number on the cover of this manual for service information.
HIGH OPERATION COSTS	1. Thermostat set too high 2. Sediment or lime in tank 3. Water heater too small for job 4. Wrong piping connections 5. Leaking faucets 6. Gas leaks 7. Wasted hot water 8. Long runs of exposed piping 9. Hot water piping in exposed wall	1. Set temperature dial to lower setting 2. Drain/flush-provide water treatment if needed 3. Install adequate heater 4. Correct piping-dip tube must be in cold inlet 5. Repair faucets 6. Check with utility-repair at once 7. Advise customer 8. Insulate piping 9. Insulate piping
INSUFFICIENT HOT WATER	1. Thermostat set too low 2. Sediment or lime in tank 3. Water heater too small 4. Wrong piping connections 5. Leaking faucets 6. Wasted hot water 7. Long runs of exposed piping 8. Hot water piping in outside wall 9. Low gas pressure	1. Turn temperature dial to desired setting 2. Drain/flush-provide water treatment if needed 3. Install adequate heater 4. Correct piping-dip tube must be in cold inlet 5 Repair faucets 6. Advise customer 7. Insulate piping 8. Insulate piping 9. Check with gas utility company
SLOW HOT WATER RECOVERY	1. Insufficient secondary air 2. Flue clogged 3. Low gas pressure 4. Improper calibration 5. Thermostat set too low 6. Water heater too small 7. Wrong piping connections 8. Wasted hot water	1. Provide ventilation to water heater. Check flue way, flue baffle, and burner 2. Clean flue, locate source and correct 3. Check with gas utility company 4. Replace thermostat 5. Turn temperature dial to desired setting 6. Install adequate heater 7. Correct piping-dip tube must be in cold inlet 8. Advise customer
DRIP FROM RELIEF VALVE	1. Excessive water pressure 2. Heater stacking 3. Closed water system	1. Use a pressure reducing valve and relief valve 2. Lower the thermostat setting 3. See “Closed System/Thermal Expansion”
THERMOSTAT FAILS TO SHUT-OFF	1. Thermostat not functioning properly 2. Improper calibration	1. Replace thermostat 2. Replace thermostat
COMBUSTION ODORS	1. Insufficient secondary air 2. Flue clogged 3. Heater installed in a confined area	1. Provide ventilation to water heater. Check flue way, flue baffle, and burner 2. Clean, locate source and correct 3. Provide fresh air ventilation
SMOKING AND CARBON FORMATION (SOOTING)	1. Insufficient secondary air 2. Low gas pressure 3. Flue clogged 4. Thermostat not functioning properly 5. Heater installed in a confined area 6. Burner flame yellow-lazy	1. Provide ventilation to water heater. Check flue way, flue baffle, burner 2. Check with gas utility company 3. Clean, locate source and correct 4. Replace thermostat 5. Provide fresh air ventilation 6. See “Burner Flame Yellow-Lazy”
CONDENSATION	1. Temperature setting too low	1. Increase the temperature setting
BURNER FLAME FLOATS AND LIFTS OFF PORTS	1. Orifice too large 2. High gas pressure 3. Flue clogged 4. Cold drafts	1. Replace with correct orifice 2. Check with gas utility company 3. Clean flue and burner-locate source and correct 4. Locate source and correct
BURNER FLAME TOO HIGH	1. Orifice too large	1. Replace with correct orifice
PILOT FLAME TOO SMALL	1. Pilot line or orifice clogged 2. Low gas pressure	1. Clean, locate source and correct 2. Check with gas utility company

STATUS LIGHT CODE TROUBLESHOOTING CHART

LED STATUS	PROBLEM	CORRECTIVE ACTION
0 FLASHES (LED NOT LIT)	Pilot light is not lit. Not enough power (millivolts) to keep it lit.	Follow the lighting instructions on the front of the water heater and record any diagnostic codes. See Status Light Codes section.
1 FLASH (EVERY 3 SECONDS)	Normal operation.	No corrective action necessary.
2 FLASHES	Insufficient power (millivolts) to the gas control valve/thermostat.	1. Check all wiring connections. If problem persists proceed to step 2. 2. Replace the thermopile. See “Replacing the Pilot/Thermopile Assembly.”
4 FLASHES	High water temperature has activated the over heat sensor.	Replace the gas control valve/thermostat. See “Removing and Replacing the Gas Control Valve/ Thermostat.”
5 FLASHES	Water temperature sensor failure	Replace the gas control valve/thermostat. See “Removing and Replacing the Gas Control Valve/ Thermostat.”
7 FLASHES	Gas Control Valve/Thermostat failure.	Replace the gas control valve/thermostat. See “Removing and Replacing the Gas Control Valve/ Thermostat.”
8 FLASHES	This condition only appears if the gas control/temperature knob has been turned off and the thermopile continued to produce electric power. This condition can occur if the thermopile does not cool down as quickly as expected when the unit is shut off. This condition can also occur if the gas control/ temperature knob has been turned off and the pilot continues to operate because the pilot valve is stuck in the open position.	Make sure that the gas control valve/thermostat knob is set to OFF. Wait one minute. Remove the outer door. Look through the sight glass for a pilot flame. If a pilot flame is observed with the gas control valve/thermostat knob set to the OFF position, the pilot valve is stuck open. Turn the main gas supply OFF. Replace the gas control valve/thermostat. For instructions, see “Removing and Replacing the Gas Control Valve/Thermostat.” If the pilot flame is not observed when the gas control valve/thermostat knob is set to the OFF position, wait 10 minutes for the thermopile to cool, then attempt to relight the pilot by following the lighting instructions on the water heater’s label. If this condition returns, replace the gas control valve/thermostat. See “Removing and Replacing the Gas Control Valve/Thermostat” for instructions.
9 FLASHES	Combustion chamber temperature sensor circuit is open or shorted	1. Check all connections. If the problem persists, proceed to step 2. 2. Replace the temperature sensor. (Temperature sensor replacement must be performed by a qualified person.) If the problem persists, proceed to step 3. 3. Replace the gas control valve/thermostat. For instructions, see “Removing and Replacing the Gas Control Valve/Thermostat.”
10 FLASHES	LDO occurrence was detected in the combustion chamber (contaminants)	1. Reset the system by following these steps: 1.) Turn the temperature adjustment knob to OFF. 2.) Unplug the thermopile plug from the gas control valve/thermostat. 3.) Wait for about three minutes. 4.) Plug the thermopile plug back into the gas control valve/ thermostat. 5.) Turn the temperature adjustment knob to PILOT and restart the water heater as directed in this manual. If the problem persists, proceed to step 2. 2. Follow the procedure outlined in “Cleaning the Combustion Chamber and Flame-Trap.” If the problem persists, proceed to step 3. 3. Shut off the gas supply to the water heater and contact Technical Assistance. The telephone number is listed on the cover of this manual.

PILOT LIGHT TROUBLESHOOTING CHART

Section A: Pilot light will not light (new installation).

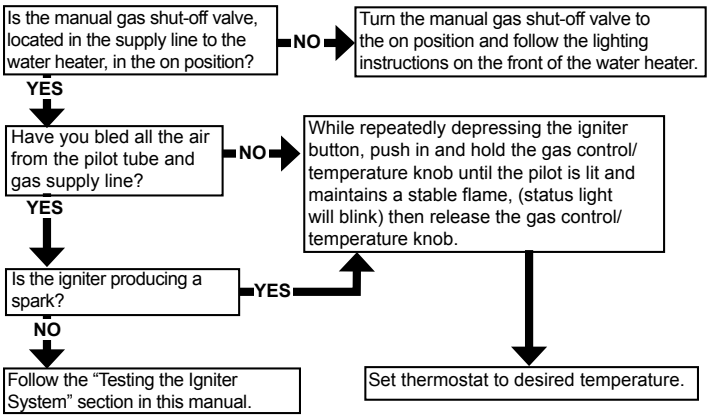

Section B: Pilot light repeatedly goes out.

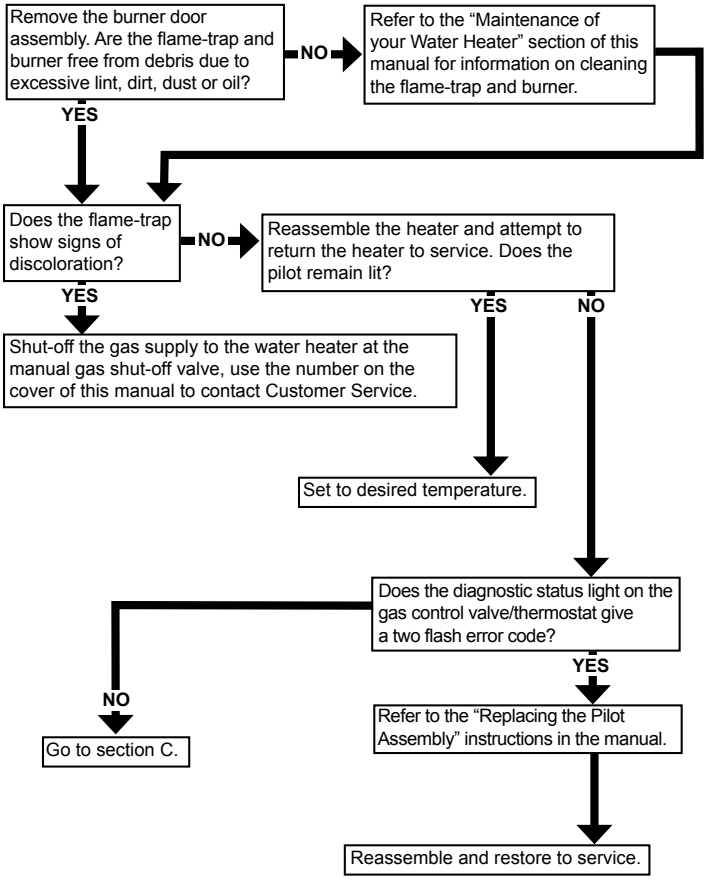

Section C: Pilot light will not remain lit.

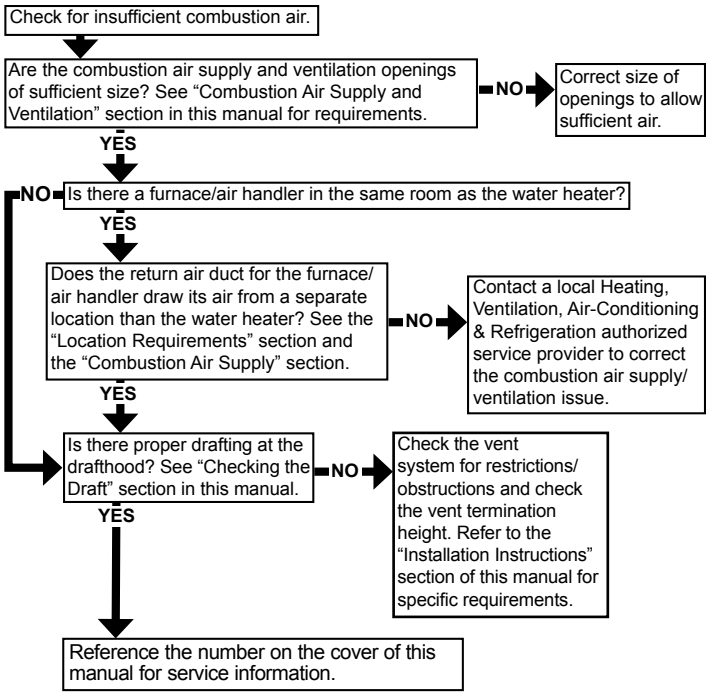

NOTE: If you are still experiencing difficulties after following the steps in sections A, B, and C, use the number on the cover of this manual to contact Customer Service.

REPAIR PARTS ILLUSTRATION

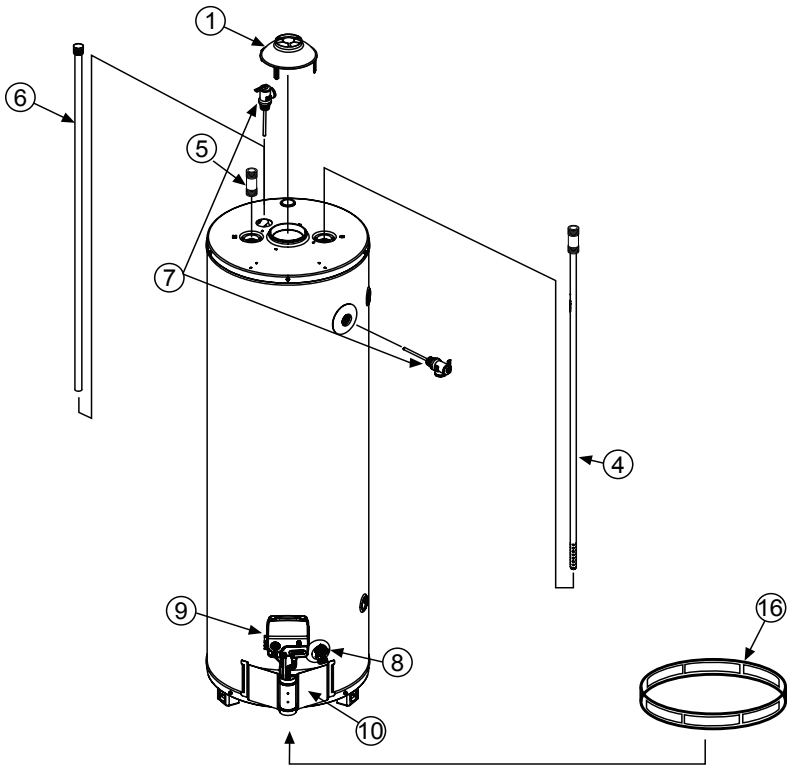

When ordering repair parts always give the following information:

1. Model, serial, and product number
2. Type of gas
3. Item number
4. Parts description

Repair Parts List

Item No.	Parts Description
1	DRAFT HOOD
2	REDUCER RING - SOME MODELS (NOT SHOWN)
3	FLUE BAFFLE (NOT SHOWN)
4	COMBINATION DIP TUBE/HEAT TRAP NIPPLE
5	HEAT TRAP/NIPPLE
6	ANODE ROD ▲
7	TEMPERATURE & PRESSURE RELIEF VALVE (LOCATED TOP OR SIDE) ■
8	DRAIN VALVE
9	GAS CONTROL VALVE/THERMOSTAT ★
10	OUTER DOOR ★
11	PILOT/THERMOPILE ASSEMBLY KIT * ★
12	BURNER DOOR ASSEMBLY * (NATURAL GAS/ULTRA LOW Nox) ★
13	BURNER DOOR GASKET * ★
14	TEMPERATURE SENSOR * ★
15	FLEX MANIFOLD TUBE * ★
16	WRAP AROUND AIR FILTER

* Pictured on next page.

LEGEND

▲ Special anode rod (see page 22)

■ Temperature and Pressure Relief Valve is required, but may not be factory installed

★ Unique: Flame Guard™ Safety System parts

Listed Parts Kits and Illustrations

Item 11: Pilot assembly kit, which contains the pilot, electrode, and thermopile (Natural Gas)

Item 12: Burner Door assembly, which contains the burner, gasket, door, pilot tube, manifold component block with retainer clip, temperature sensor, and pilot assembly. (Natural Gas/Low Nox)

Item 13: Contains burner door gasket

Item 14: Contains temperature sensor

Item 15: Contains flexible manifold tube

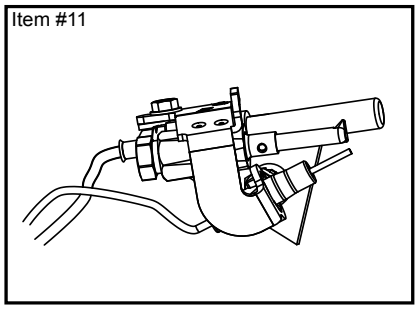

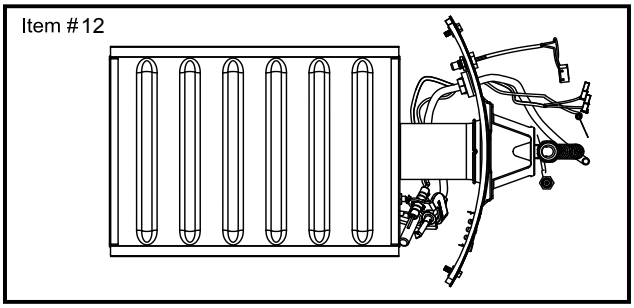

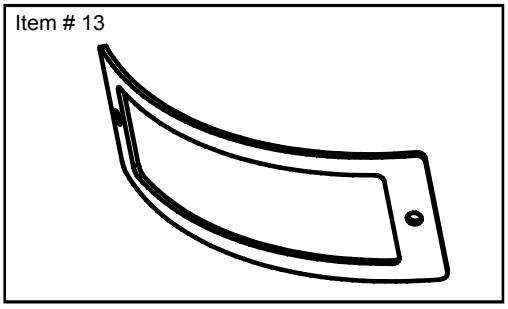

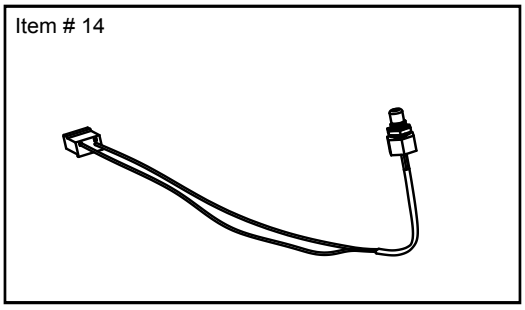

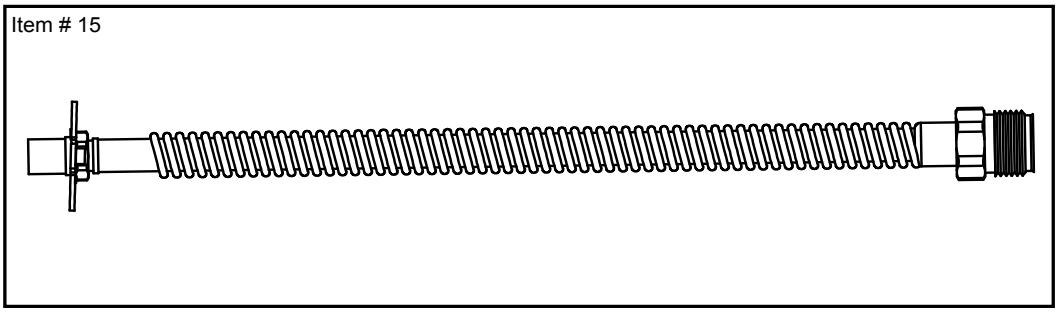

NOTES

NOTES

Copyright © 2013 American Water Heater Company. All Rights Reserved. Printed in the U.S.